USER MANUAL

Q3x

CUSTOM®

CUSTOM S.p.A.
Via Berettine 2/B
43010 Fontevivo (PARMA) - Italy
Tel. : +39 0521-680111
Fax : +39 0521-610701
http: www.custom.biz

Customer Service Department:
www.custom4u.it

© 2018 CUSTOM S.p.A. – Italy.
All rights reserved. Total or partial reproduction of this manual in whatever form, whether by printed or electronic means, is forbidden. While guaranteeing that the information contained in it has been carefully checked, CUSTOM S.p.A. and other entities utilized in the realization of this manual bear no responsibility for how the manual is used. Information regarding any errors found in it or suggestions on how it could be improved are appreciated. Since products are subject to continuous check and improvement, CUSTOM S.p.A. reserves the right to make changes in information contained in this manual without prior notification.

The pre-installed multimedia contents are protected from Copyright CUSTOM S.p.A. Other company and product names mentioned herein may be trademarks of their respective companies. Mention of third-party products is for informational purposes only and constitutes neither an endorsement nor a recommendation. CUSTOM S.p.A. assumes no responsibility with regard to the performance or use of these products.

THE IMAGES USED IN THIS MANUAL ARE USED AS AN ILLUSTRATIVE EXAMPLES. THEY COULDN'T REPRODUCE THE DESCRIBED MODEL FAITHFULLY.

**UNLESS OTHERWISE SPECIFIED, THE INFORMATION GIVEN IN THIS MANUAL
ARE REFERRED TO ALL MODELS IN PRODUCTION AT THE ISSUE DATE OF THIS DOCUMENT.**

GENERAL INSTRUCTIONS
CUSTOM S.p.A. declines all responsibility for accidents or damage to persons or property occurring as a result of tampering, structural or functional modifications, unsuitable or incorrect installations, environments not in keeping with the equipment's protection degree or with the required temperature and humidity conditions, failure to carry out maintenance and periodical inspections and poor repair work.

GENERAL SAFETY INFORMATION
Your attention is drawn to the following actions that could compromise the characteristics of the product:

- Read and retain the instructions which follow.
- Follow all indications and instructions given on the device.
- Make sure that the surface on which the device rests is stable. If it is not, the device could fall, seriously damaging it.
- Make sure that the device rests on a hard (non-padded) surface and that there is sufficient ventilation.
- Do not fix indissolubly the device or its accessories such as power supplies unless specifically provided in this manual.
- When positioning the device, make sure cables do not get damaged.
- [Only OEM equipment] The equipment must be installed in a kiosk or system that provides mechanical, electrical and fire protection.
- The mains power supply must comply with the rules in force in the Country where you intend to install the equipment.
- Make sure that there is an easily-accessible outlet with a capacity of no less than 10A closely to where the device is to be installed.
- Make sure the power cable provided with the appliance, or that you intend to use is suitable with the wall socket available in the system.
- Make sure the electrical system that supplies power to the device is equipped with a ground wire and is protected by a differential switch.
- Before any type of work is done on the machine, disconnect the power supply.
- Use the type of electrical power supply indicated on the device label.
- These devices are intended to be powered by a separately certified power module having an SELV, non-energy hazardous output. (IEC60950-1 second edition).
- [Only POS equipment] The energy to the equipment must be provided by power supply approved by CUSTOM S.p.A.
- Take care the operating temperature range of equipment and its ancillary components.
- Do not block the ventilation openings.
- Do not insert objects inside the device as this could cause short-circuiting or damage components that could jeopardize printer functioning.
- Do not carry out repairs on the device yourself, except for the normal maintenance operations given in the user manual.
- The equipment must be accessible on these components only to trained, authorized personnel.
- Periodically perform scheduled maintenance on the device to avoid dirt build-up that could compromise the correct, safe operation of the unit.
- Do not touch the head heating line with bare hands or metal objects. Do not perform any operation inside the printer immediately after printing because the head and motor tend to become very hot.
- Use consumables approved by CUSTOM S.p.A.

THE CE MARK AFFIXED TO THE PRODUCT CERTIFY THAT THE PRODUCT SATISFIES THE BASIC SAFETY REQUIREMENTS.

The device is in conformity with the essential Electromagnetic Compatibility and Electric Safety requirements laid down in Directives 2014/30/EU and 2014/35/EU inasmuch as it was designed in conformity with the provisions laid down in the following Standards:

- EN 55032 *(Limits and methods of measurements of radio disturbance characteristics of Information Technology Equipment)*
- EN 55024 *(Information Technology Equipment – Immunity characteristics – Limits and methods of measurement)*
- EN 60950-1 *(Safety of information equipment including electrical business equipment)*

The device is in conformity with the essential requirements laid down in Directives 2014/53/EU about devices equipped with intentional radiators The Declaration of Conformity and other available certifications can be downloaded from the site www.custom4u.it.

GUIDELINES FOR THE DISPOSAL OF THE PRODUCT

The crossed-out rubbish bin logo means that used electrical and electronic products shall NOT be mixed with unsorted municipal waste. For more detailed information about recycling of this product, refer to the instructions of your country for the disposal of these products.

- Do not dispose of this equipment as miscellaneous solid municipal waste, but arrange to have it collected separately.
- The re-use or correct recycling of the electronic and electrical equipment (EEE) is important in order to protect the environment and the wellbeing of humans.
- In accordance with European Directive WEEE 2002/96/EC, special collection points are available to which to deliver waste electrical and electronic equipment and the equipment can also be handed over to a distributor at the moment of purchasing a new equivalent type.
- The public administration and producers of electrical and electronic equipment are involved in facilitating the processes of the re-use and recovery of waste electrical and electronic equipment through the organisation of collection activities and the use of appropriate planning arrangements.
- Unauthorised disposal of waste electrical and electronic equipment is punishable by law with the appropriate penalties.

The format used for this manual improves use of natural resources reducing the quantity of necessary paper to print this copy.

FCC STATEMENT (FEDERAL COMMUNICATIONS COMMISSIONS).

This statement refers only to Q3x Wi-Fi with CC3000 embedded Wi-Fi module. This device complies with Part 15 of the FCC Rules. Operation is subject to the following conditions:

- The devices may not cause harmful interference.
- The devices must accept any interference received, including interference that may cause undesired operation.

NOTE: This equipment has been tested and found to comply with the limits for a Class B digital device, pursuant to Part 15 of the FCC Rules. These limits are designed to provide reasonable protection against harmful interference in a residential installation. This equipment generates, uses and can radiate radio frequency energy and, if not installed and used in accordance with the instructions, may cause harmful interference to radio communications. However, there is no guarantee that interference will not occur in a particular installation. If this equipment does cause harmful interference to radio or television reception, which can be determined by turning the equipment off and on, the user is encouraged to try and correct the interference by one or more of the following measures:

- Reorient or relocate the receiving antenna.
- Increase the separation between the equipment and receiver.
- Connect the equipment into an outlet on a circuit different from that to which the receiver is connected.
- Consult the dealer or an experienced radio/TV technician for help.

Modifications to this product not authorized by CUSTOM S.p.A. could void the FCC & Industry Canada regulations and negate your authority to operate the product.

This Class B digital apparatus complies with Canadian ICES-003.
Cet appareil numérique de la classe B est conforme à la norme NMB-003 du Canada.

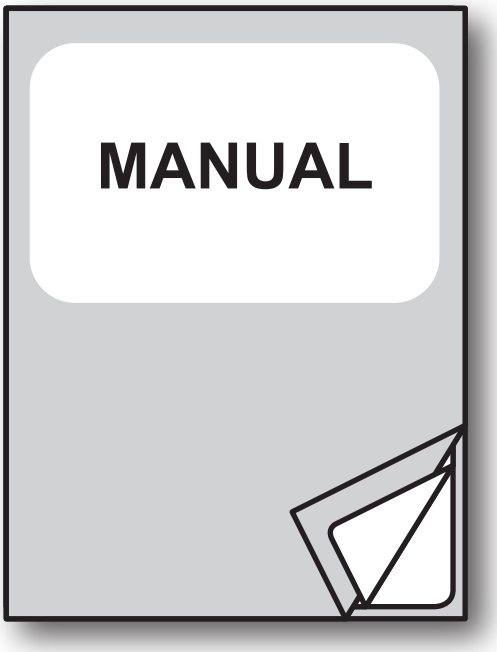

For details on the commands,
refer to the manual with code **77200000001400**

For further information about the use of “PrinterSet” tool
refer to the manual with code **78200000001800**

TABLE OF CONTENTS

1 INTRODUCTION 9

2 IDENTIFICATION OF THE MODELS 11

3 DESCRIPTION 13

3.1 Box contents 13
3.2 Device components: external views 14
3.3 Device components: internal view 16
3.4 Product label 17
3.5 Key functions: power up 18
3.6 Key functions: standby 19
3.7 Status flashes 20

4 INSTALLATION 23

4.1 Connections 23
4.2 Pinout 25
4.3 Driver and SDK 31

5 OPERATION 33

5.1 Switch the device ON/OFF 33
5.2 Opening cover 34
5.3 Loading the paper roll 35

6 CONFIGURATION 37

6.1 Configuration by keys 37
6.2 Configuration by software 42
6.3 Device status 43
6.4 Communication parameters 44
6.5 Operating parameters 47
6.6 Alignment parameters 49
6.7 Hexadecimal dump 50

7 WIRELESS COMMUNICATION . . . 51
7.1 Bluetooth pairing with Windows devices . . . 51
7.2 Bluetooth pairing with macOS devices . . . 54
7.3 Bluetooth pairing with Linux devices . . . 56
7.4 Bluetooth pairing with Android devices . . . 58
7.5 Bluetooth pairing with iOS devices . . . 60
7.6 Bluetooth pairing with Windows Phone devices . . . 62
7.7 Communication with Wi-Fi devices . . . 64

8 ALIGNMENT . . . 65
8.1 Enable alignment . . . 66
8.2 Calibration . . . 68
8.3 Alignment parameters . . . 70
8.4 Printing area . . . 73

9 MAINTENANCE . . . 75
9.1 Paper jam . . . 75
9.2 Planning of cleaning operations . . . 76
9.3 Cleaning . . . 77
9.4 Firmware upgrade . . . 80

10 SPECIFICATION . . . 81
10.1 Hardware specifications . . . 81
10.2 Character specifications . . . 84
10.3 Device dimensions . . . 85
10.4 Power supply and power cord dimensions . . . 86
10.5 Dimensions of power supply . . . 88
10.6 Paper specification . . . 89
10.7 Character sets in CUSTOM/POS emulation . . . 90

11 CONSUMABLES . . . 93

12 ACCESSORIES . . . 95

13 TECHNICAL SERVICE . . . 97

1 INTRODUCTION

This document is divided into sections and chapters. Each chapter can be reached by the index at the beginning of this document. The index can be reached by the button on each page as shown in the diagram below.

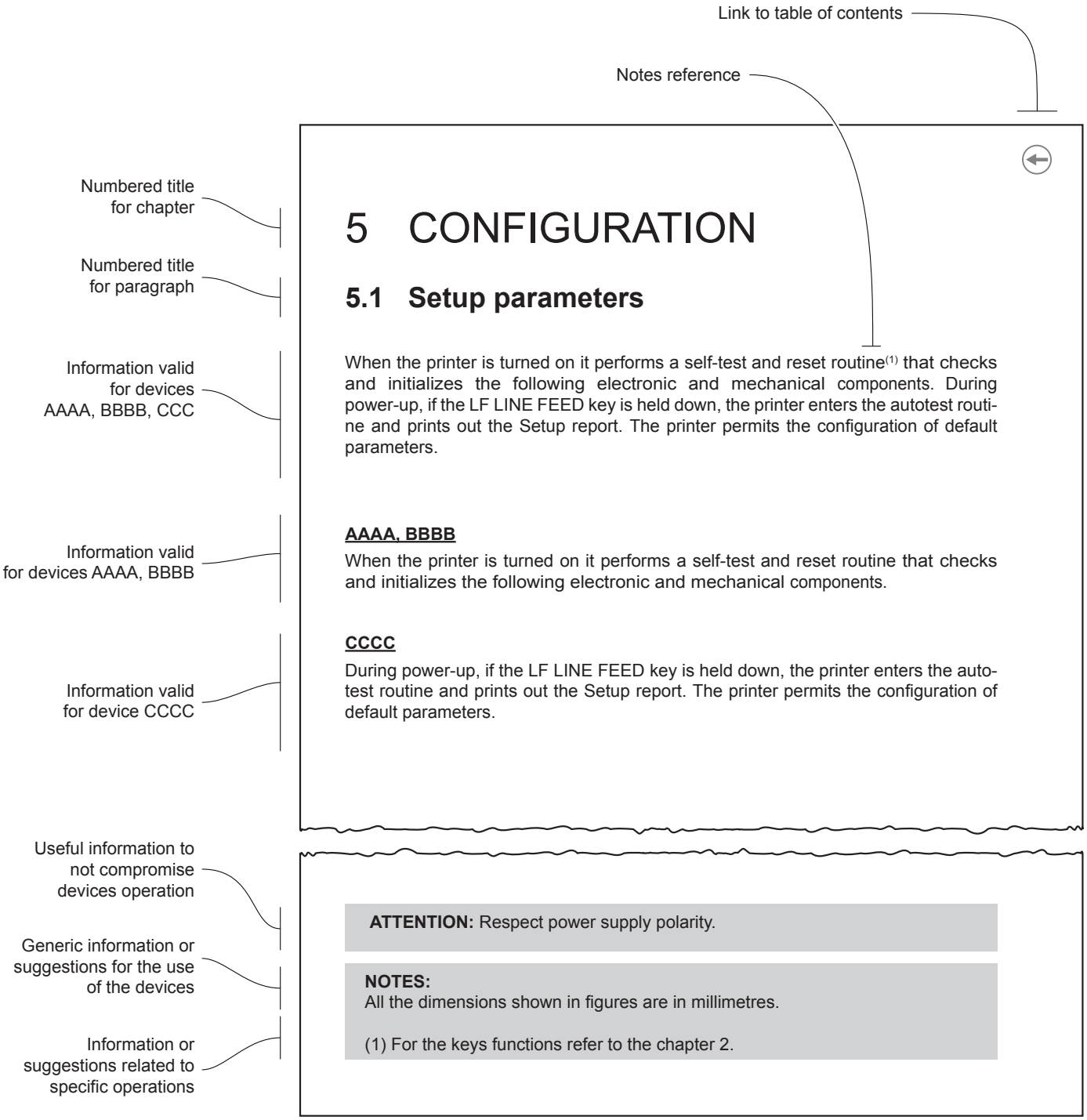

2 IDENTIFICATION OF THE MODELS

NOMENCLATURE	DESCRIPTION
Q3x	Q3x base configuration with RS232 serial and USB interfaces
Q3x ETH	Q3x base configuration with Ethernet interface
Q3x Wi-Fi	Q3x with Wi-Fi module
Q3x BTH	Q3x with Bluetooth module

3 DESCRIPTION

3.1 Box contents

Remove the device from its carton being careful not to damage the packing material so that it may be re-used if the device is to be transported in the future.
Make sure that all the components illustrated below are present and that there are no signs of damage. If there are, contact customer service.

1. Device
2. Standard AC power supply cable or
   US market AC power supply cable
3. Documentation (Short guide)
4. AC power supply

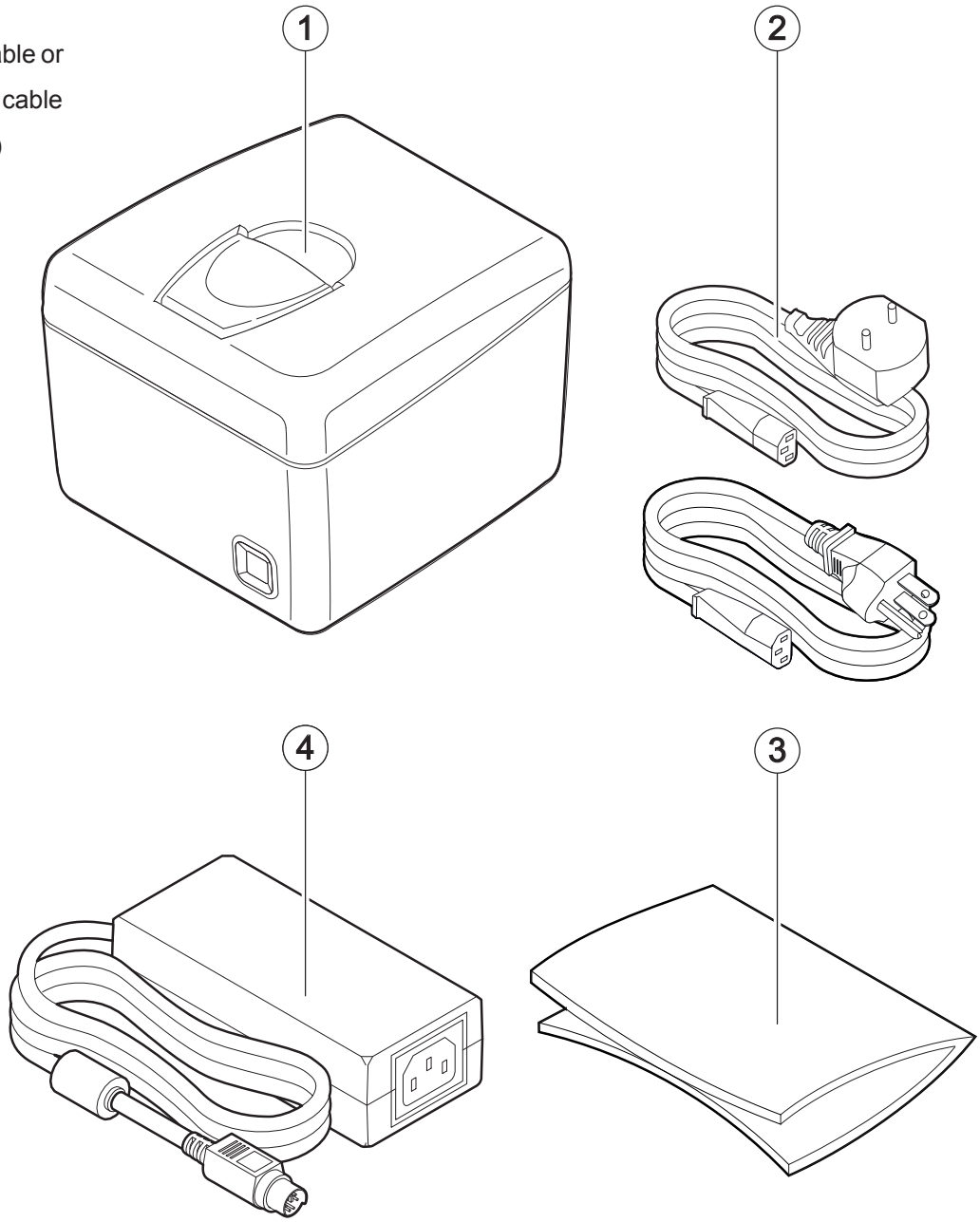

3.2 Device components: external views

Q3x, Q3x BTH, Q3x Wi-Fi

1. Paper compartment cover
2. Paper compartment cover opening lever
3. Paper out
4. Status LED
5. FEED key
6. RS232 serial port
7. USB port
8. Drawer port
9. Power supply port
10. ON/OFF key
11. WiFi or Bluetooth board (only for Q3x BTH and Q3x Wi-Fi)

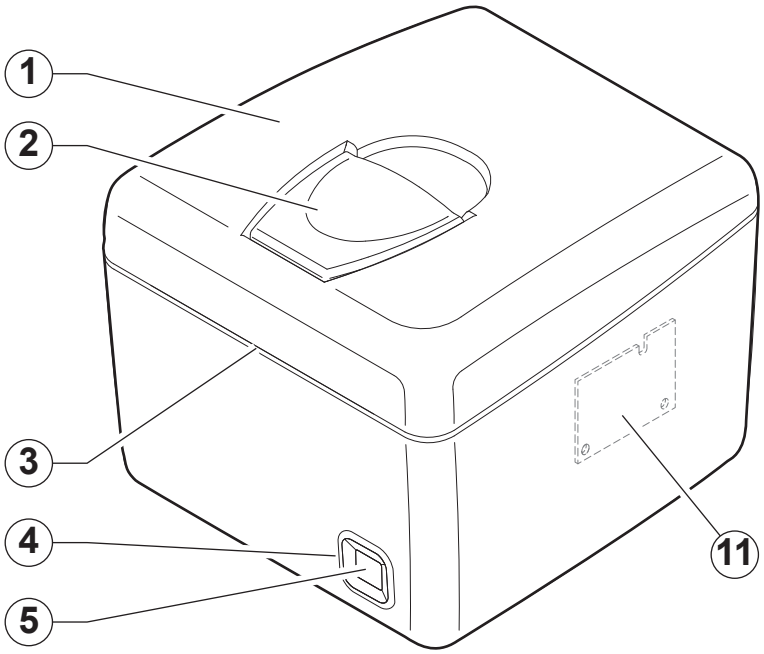

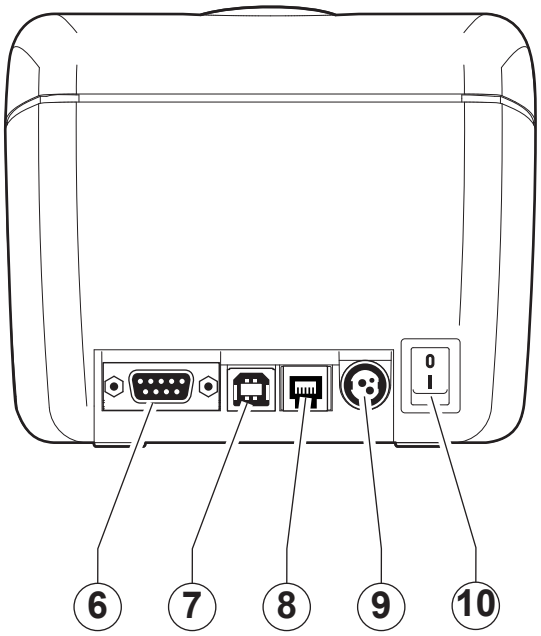

Q3x ETH

1. Paper compartment cover
2. Paper compartment cover opening lever
3. Paper out
4. Status LED
5. FEED key
6. Ethernet port
7. Drawer port
8. Power supply port
9. ON/OFF key

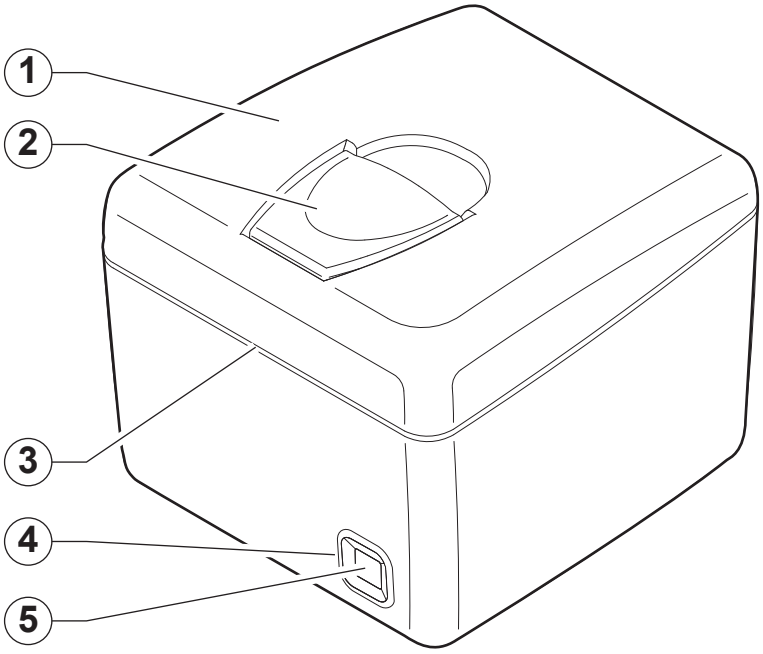

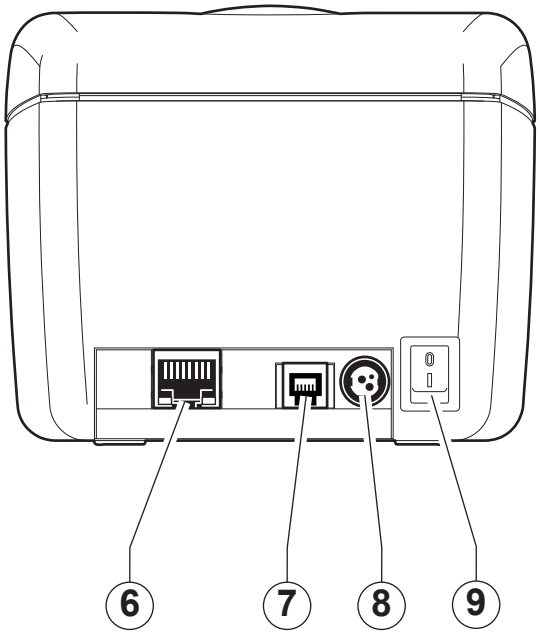

3.3 Device components: internal view

1. Sensor for printhead temperature
2. Sensor for paper end and black mark detection
3. Sensor for cover open

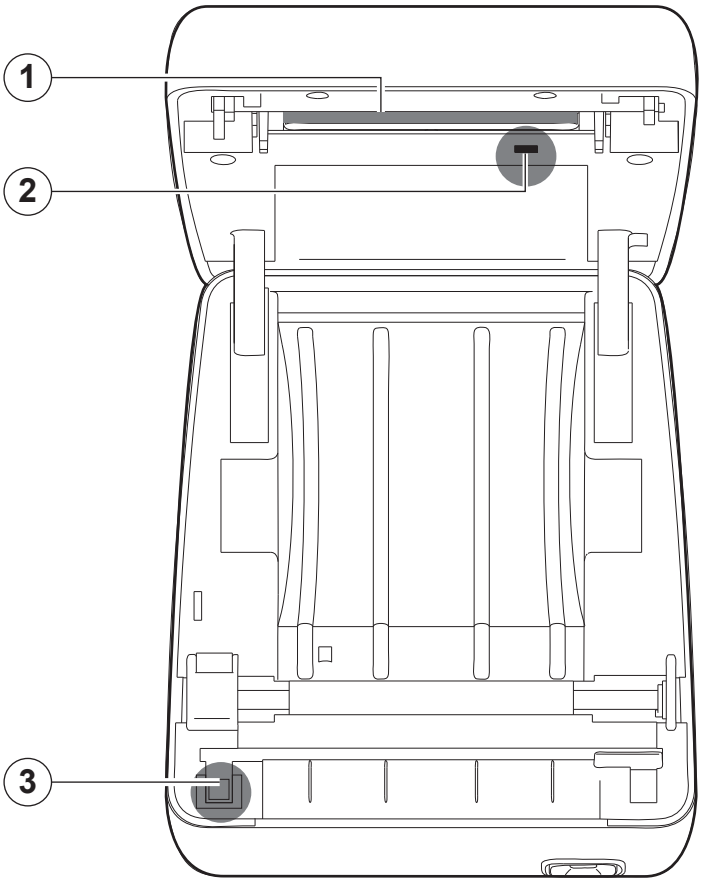

3.4 Product label

PC = Product code (14 digits)
SN = Serial number
HW = Hardware release

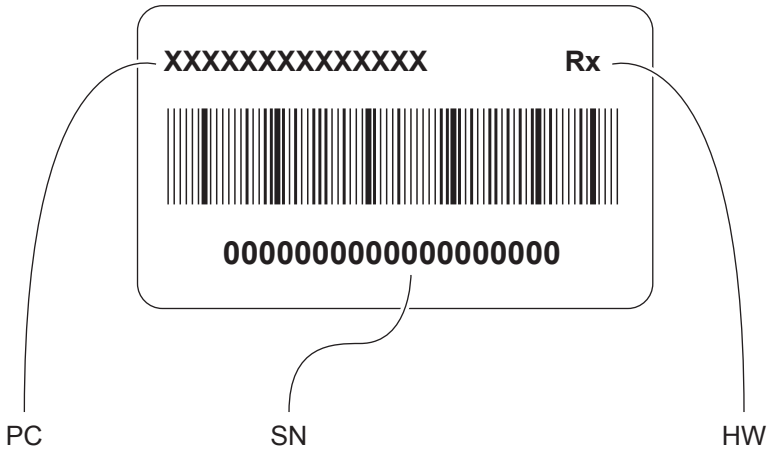

3.5 Key functions: power up

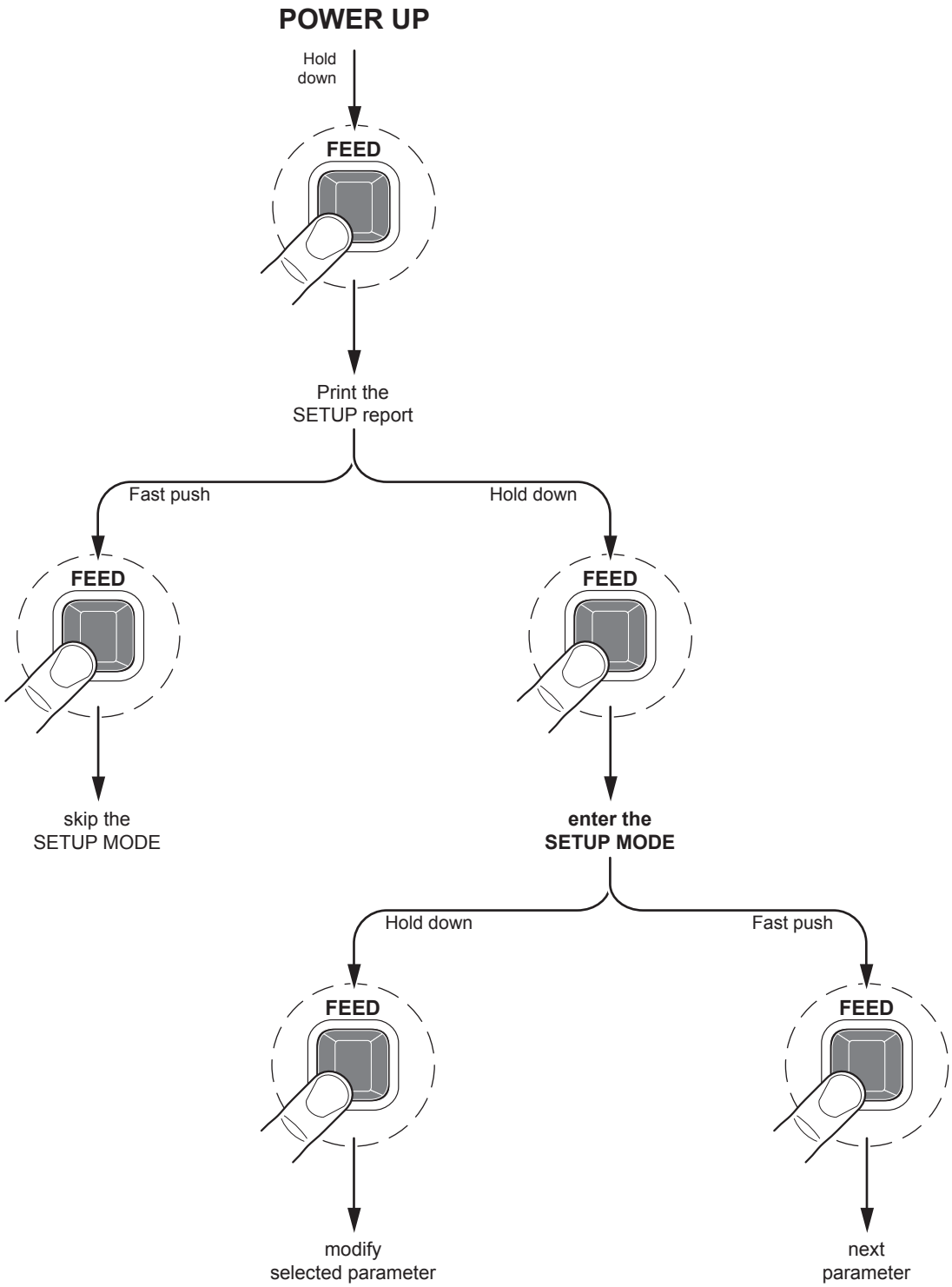

3.6 Key functions: standby

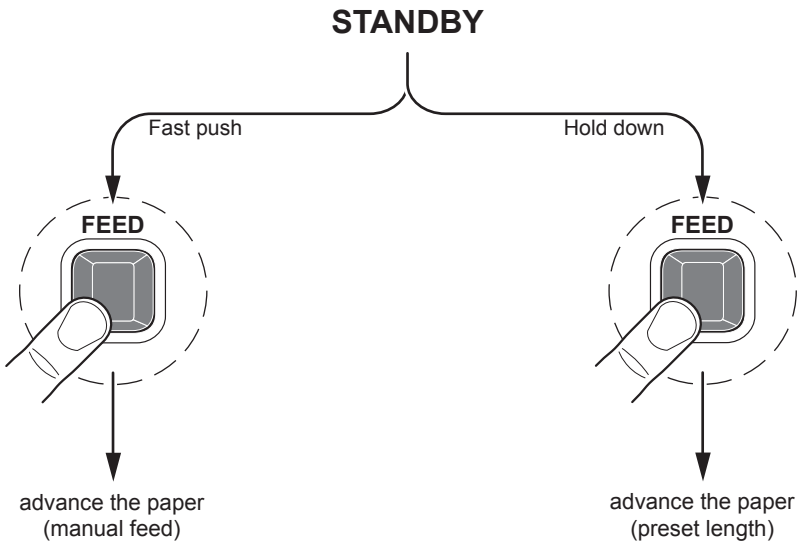

3.7 Status flashes

The status LED indicates hardware status of device. Given in the table below are the various LED signals and the corresponding device status.

Q3x, Q3x ETH

STATUS LED			DESCRIPTION
-	○	OFF	DEVICE OFF
WHITE/BLU	WHITE BLUE	ON	DEVICE ON: READY MODE
BLUE COMMUNICATION STATUS	●	x 1	RECEIVE DATA
		x 2	RECEPTION ERRORS (PARITY, FRAME ERROR, OVERRUN ERROR)
		x 3	COMMAND NOT RECOGNIZED
		x 4	COMMAND RECEPTION TIME OUT
YELLOW RECOVERABLE ERROR	●	x 2	PRINTHEAD OVERHEATED
		x 3	PAPER END
		x 5	POWER SUPPLY VOLTAGE INCORRECT
		x 6	COVER OPEN
RED UNRECOVERABLE ERROR	●	x 3	RAM ERROR
		x 4	EEPROM ERROR
		x 5	AUTOCUTTER ERROR

Q3x BTH, Q3x Wi-Fi

STATUS LED			DESCRIPTION
-	○	OFF	DEVICE OFF
WHITE/BLU	WHITE BLUE	ON	DEVICE ON: READY MODE. CABLE COMMUNICATION ACTIVE AND/OR CABLE COMMUNICATION Wi-Fi OR BLUETOOTH DEACTIVATED
BLUE COMMUNICATION STATUS	●	x 1	RECEIVE DATA
		x 2	RECEPTION ERRORS (PARITY, FRAME ERROR, OVERRUN ERROR)
		x 3	COMMAND NOT RECOGNIZED
		x 4	COMMAND RECEPTION TIME OUT
YELLOW NOTIFICATION STATUS	●	x 2	HEADING OVER TEMPERATURE
		x 3	PAPER END
		x 5	POWER SUPPLY VOLTAGE INCORRECT
		x 6	COVER OPEN
YELLOW WiFi / BLUETOOTH STATUS	●	x 1	INITIALIZATION MODULES Wi-Fi OR INITIALIZATION MODULES BLUETOOTH
GREEN WiFi / BLUETOOTH STATUS	●	ON	DEVICE ON: NO ERROR WIRELESS COMMUNICATION ACTIVE, WAITING TO OPEN A Wi-Fi SOCKET OR PAIRING BLUETOOTH IS IN PROGRESS
VIOLET WiFi / BLUETOOTH STATUS	●	ON	WIRELESS CONNECTION ACTIVE.
RED UNRECOVERABLE ERROR	●	x 3	RAM ERROR
		x 4	EEPROM ERROR
		x 5	AUTOCUTTER ERROR

4 INSTALLATION

4.1 Connections

Q3x, Q3x BTH, Q3x Wi-Fi

The following figure shows the possible connections for the device.

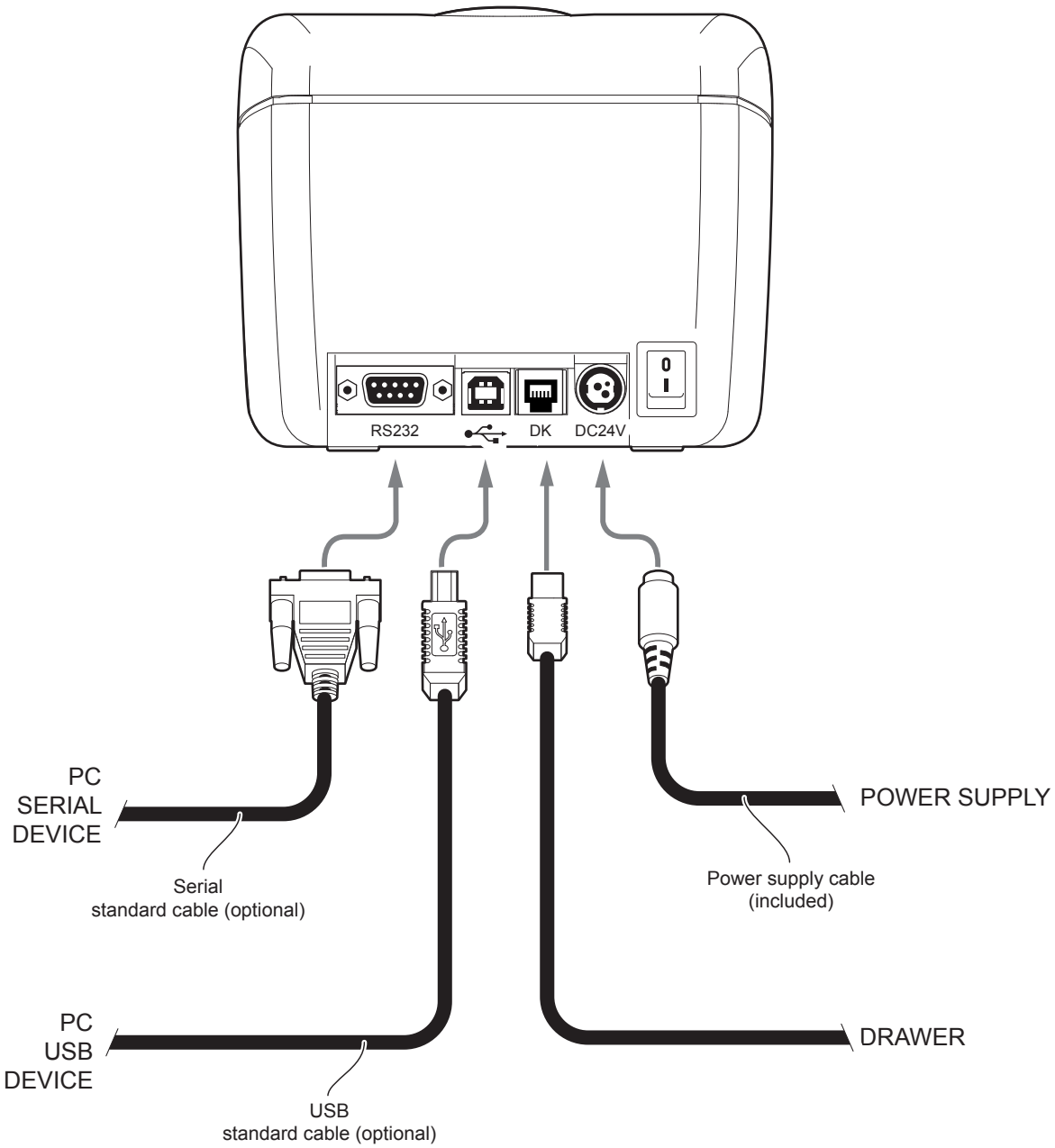

NOTE: When RS232 and USB communication cables are connected to the device simultaneously, the communication takes place via the USB port.

Q3x ETH

The following figure shows the possible connections for the device.

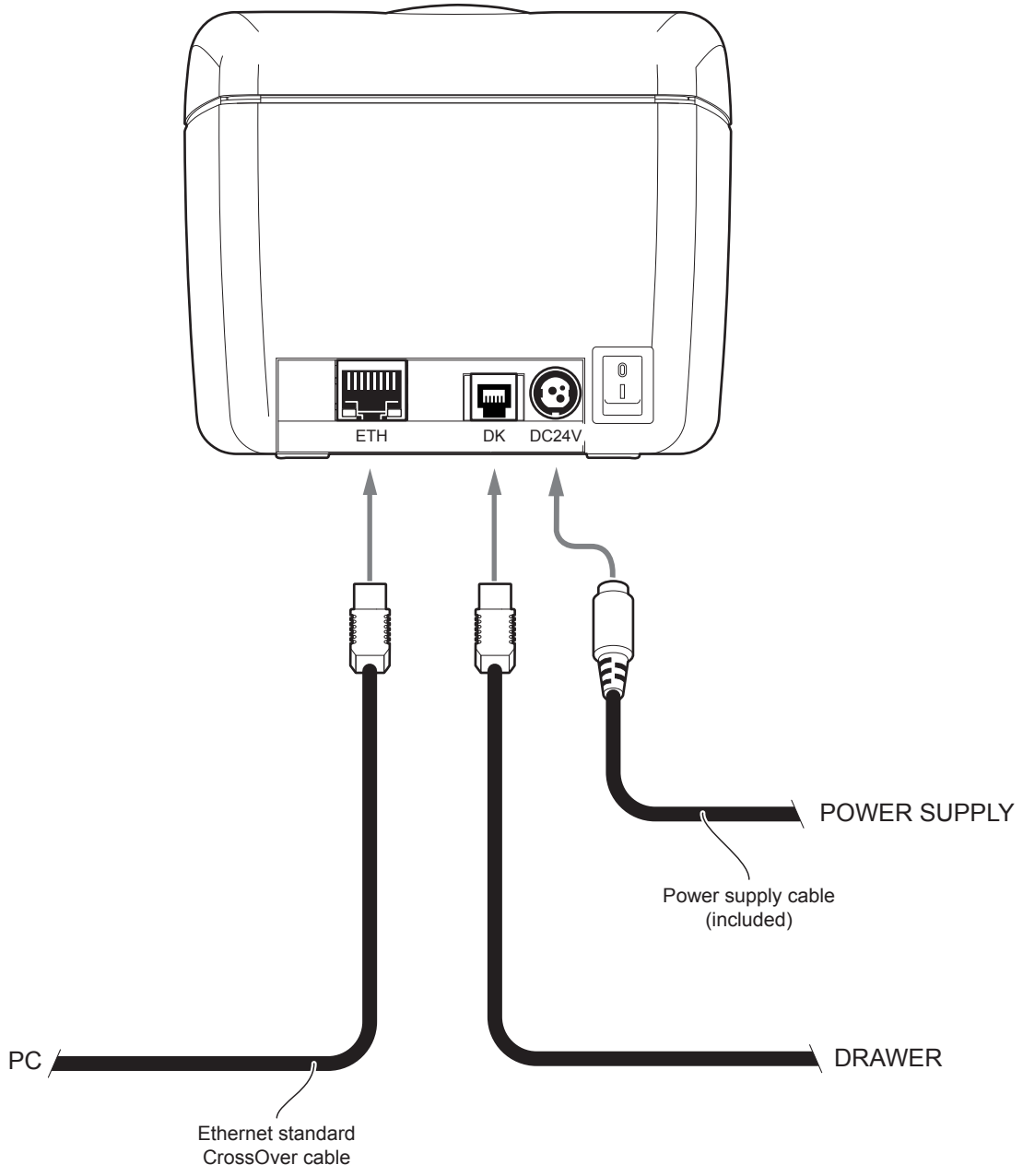

4.2 Pinout

Q3x, Q3x BTH, Q3x Wi-Fi

POWER SUPPLY
Tripolar female connector

J12	1	GND
	2	+24 Vdc
	3	GND
	4	Frame GND

ATTENTION:
Respect power supply polarity.

NOTE:
Power supply cable
The following figure shows the connector pinout of the power supply cable for the device:

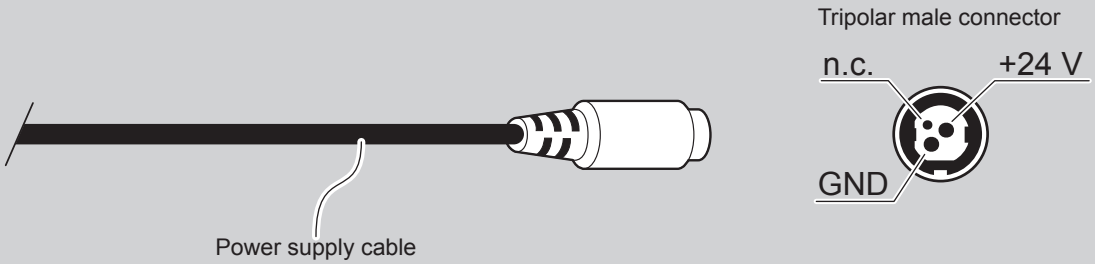

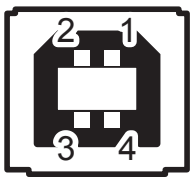

USB INTERFACE
Female USB type B connector

J2	1	USB-PLUG	(in)
	2	D-	(in/out)
	3	D+	(in/out)
	4	GND	
	SH1	SHIELD	
	SH2	SHIELD	

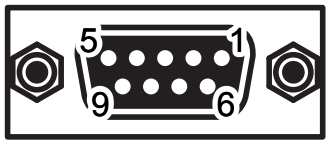

RS232 SERIAL INTERFACE

Female DB9 connector

J1	1	DTR	
	2	TX	During transmission, takes the values -VRS232 and +VRS232 depending on data.
	3	RX	During reception, takes the values -VRS232 and +VRS232 depending on data.
	4	n.c.	
	5	GND	
	6	DTR	When +VRS232, device is power on.
	7	n.c.	
	8	RTS-O	When +VRS232, device is ready to receive data.
	9	n.c.	

NOTES:
Given the presence of the RS232 standard, logic value “0” is associated with voltage value +VRS232 (corresponds to a voltage level of between +3Vdc and +15Vdc) and logic value “1” is associated with voltage value -VRS232 (corresponds to a voltage level of between -3Vdc and -15Vdc).

DEVICE > PC connection
The following picture shows an example of connections between the device and a personal computer using a 9 pin RS232 serial connectors:

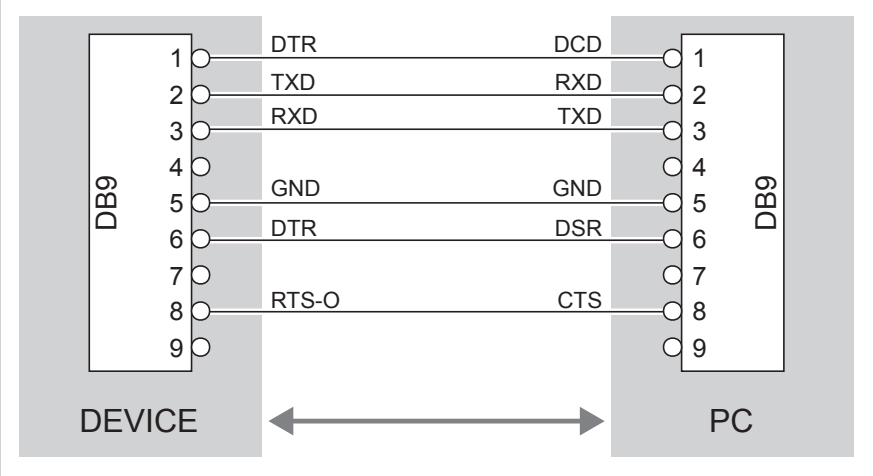

When use a serial cable, we recommend the installation of a ferrite core on the serial cable.

DRAWER CONNECTOR

Female RJ12 connector

J5	1	GND		
	2	SOLEN	(out)	Drawer 1 command
	3	CASS	(in)	Drawer status
	4	+24V TO		
	5	n.c.		
	6	GND		

ATTENTION:
This device can manage drawers of power supplies 24 V. To prevent a current overload, check and set correctly the kind of cash drawer.

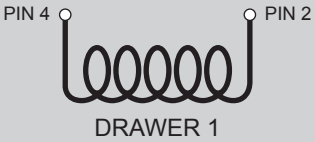

NOTE:
The solenoid of the drawer 1 must be connected from Pin 2 to Pin 4 on the drawer connector

NOTE:
DEVICE > DRAWER (optional) connection
Use an optional adapter cable RJ12-Jack to connect the device to a drawer. Refer to the picture below for the connector pin signals:

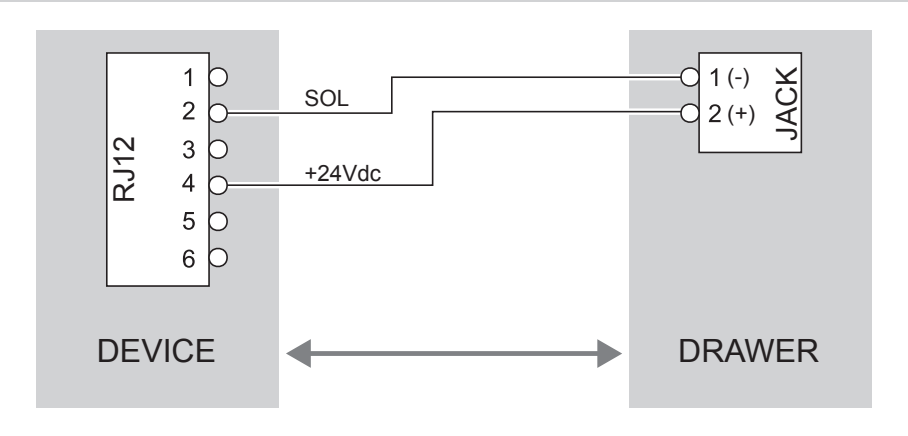

Q3x ETH

POWER SUPPLY
Tripolar female connector

J12	1	GND
	2	+24 Vdc
	3	GND
	4	Frame GND

ATTENTION:
Respect power supply polarity.

NOTE:
Power supply cable
The following figure shows the connector pinout of the power supply cable for the device:

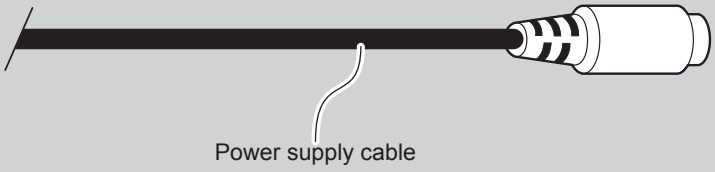

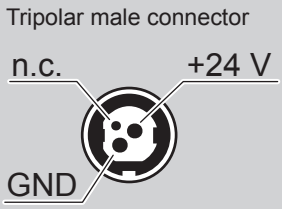

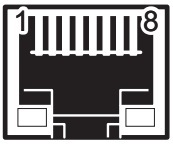

ETHERNET INTERFACE

Female RJ45 connector

J20	1	TPOUT+
	2	TPOUT-
	3	TPIN+
	4	GND
	5	GND
	6	TPIN-
	7	n.c
	8	n.c
	9	+3.3 V
	10	LED-LAN
	11	+3.3 V
	12	LED-LNK
	13	SH1
	14	SH2
	15	FIX

NOTES:
The functionality of two LED are specified in the following tables:

- For 10Base-T connection:

LED	FUNCTION
LED-LNK	Link (yellow color): the LED lights up when a connection is active
LED-LAN	Rx/Tx: (green color): the LED lights up when occurs a data reception or transmission

- For 10/100Base-TX connection:

LED	FUNCTION
LED-LNK	The LED light (yellow color) on when a connection is active and flashes wnen occurs a data reception or transmission
LED-LAN	The LED light (green color) on when occurs a 100 Mbit connection and off when occurs a 10 Mbit connection

The device automatically recognizes the type of connection (cross or pin-to-pin).

The pinout shown in table represents the input signals to component J20 before the isolation voltage transformer (through-hole pin).

DRAWER CONNECTOR

Female RJ12 connector

J5	1	GND		
	2	SOLEN	(out)	Drawer 1 command
	3	CASS	(in)	Drawer status
	4	+24V TO		
	5	n.c.		
	6	GND		

ATTENTION:
This device can manage drawers of power supplies 24 V. To prevent a current overload, check and set correctly the kind of cash drawer.

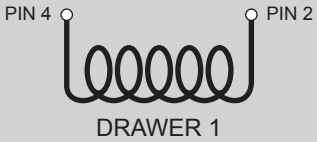

NOTE:
The solenoid of the drawer 1 must be connected from Pin 2 to Pin 4 on the drawer connector

NOTE:
DEVICE > DRAWER (optional) connection
Use an optional adapter cable RJ12-Jack to connect the device to a drawer. Refer to the picture below for the connector pin signals:

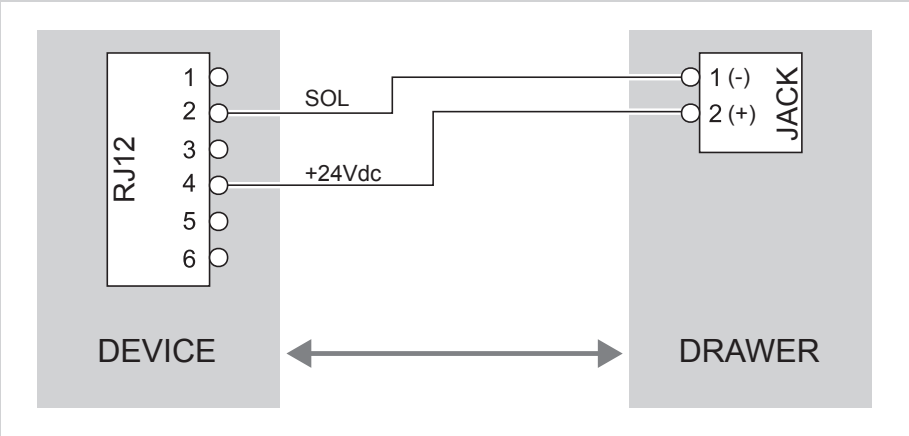

4.3 Driver and SDK

In the website www.custom4u.it are available the drivers for the following operating system:

OPERATING SYSTEM	DESCRIPTION	INSTALLATION PROCEDURE
Windows	Driver for Windows XP	From the START menu, press Run and type-in the path where the SW was saved on your PC, then click OK. Follow the instructions that appear on the screen to install the driver.
	Driver for Windows VISTA (32/64 bit)	
	Driver for Windows 7 (32/64 bit)	
	Driver for Windows 8 (32/64 bit)	
	Driver for Windows 8.1 (32/64 bit)	
	Driver for Windows10 (32/64 bit)	
	Self-installing driver for Virtual COM (32/64 bit) (see paragraph 6.4)	
	Driver for OPOS (only for Q3x, Q3x BTH, Q3x Wi-Fi)	
Linux	32/64 bit	Follow the instruction get back on the “README.txt” file. You can find it in the software package downloaded in advance.
macOS	Driver for macOS X	Follow the instruction in the “.pkg” file. You can find it in the software package downloaded previously.
Android	Library for CustomAndroidAPI	Extract the zipped folder to the the destination path desired. Follow the instructions present in the software package that you downloaded on how to install and use the library.
iOS	Library for CustomiOSApi (only for Q3x ETH, Q3x BTH, Q3x Wi-Fi)	Extract the zipped folder to the the destination path desired. Follow the instructions present in the software package that you downloaded on how to install and use the library.
Windows Phone		Extract the zipped folder to the the destination path desired. Follow the instructions present in the software package that you downloaded on how to install and use the library.

5 OPERATION

5.1 Switch the device ON/OFF

1

For printing receipts with wide black zones, we recommend to replace the included power supply with the optional power supply that provides a peak current higher for larger time intervals (see technical specification for power supplies codes).

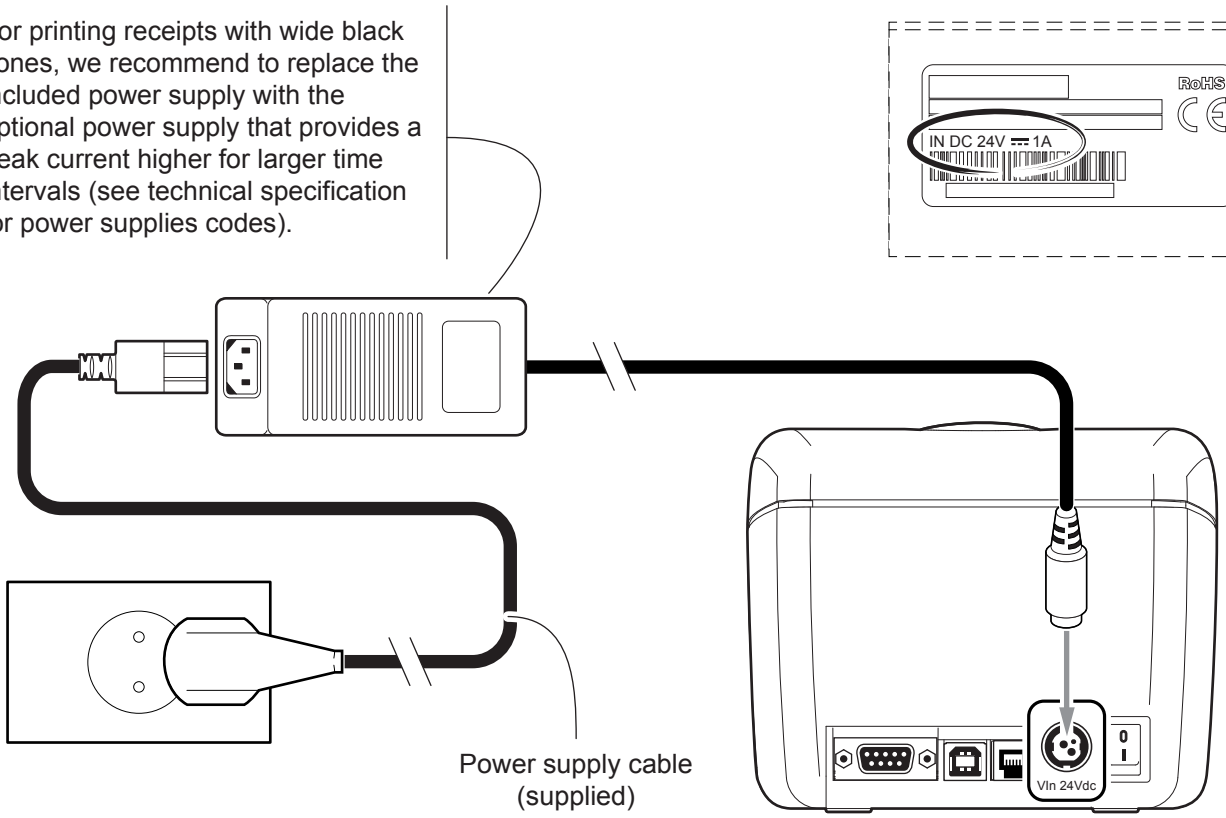

Connect the power adapter (supplied) to the device and the mains outlet.
Use the type of electrical power supply indicated on the label.

2

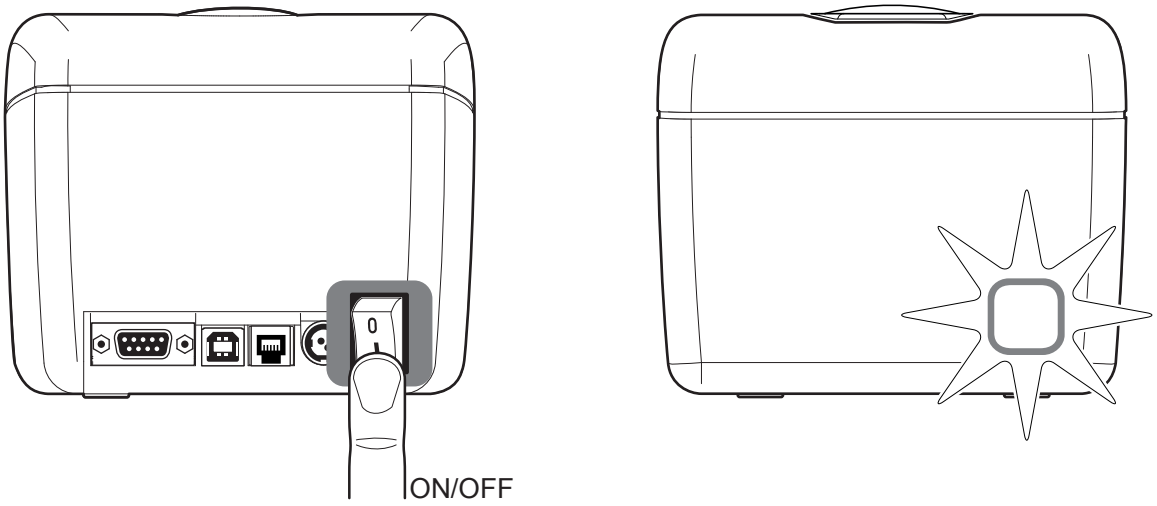

Switch device on pressing key ON/OFF, the LED is switched on and the device is ready.
Switch device off pressing key ON/OFF.

5.2 Opening cover

To open the device cover proceed as follows.

1

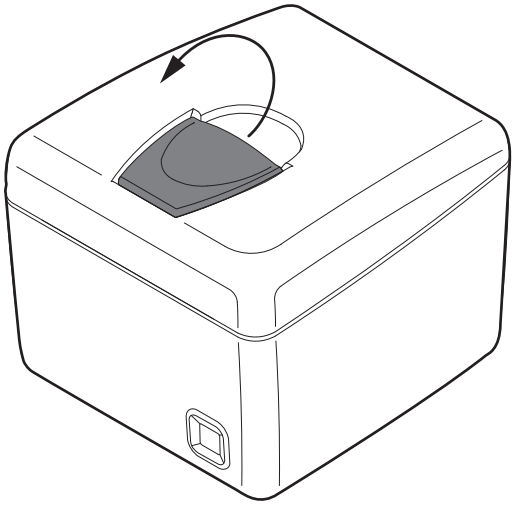

Lift the opening lever.

2

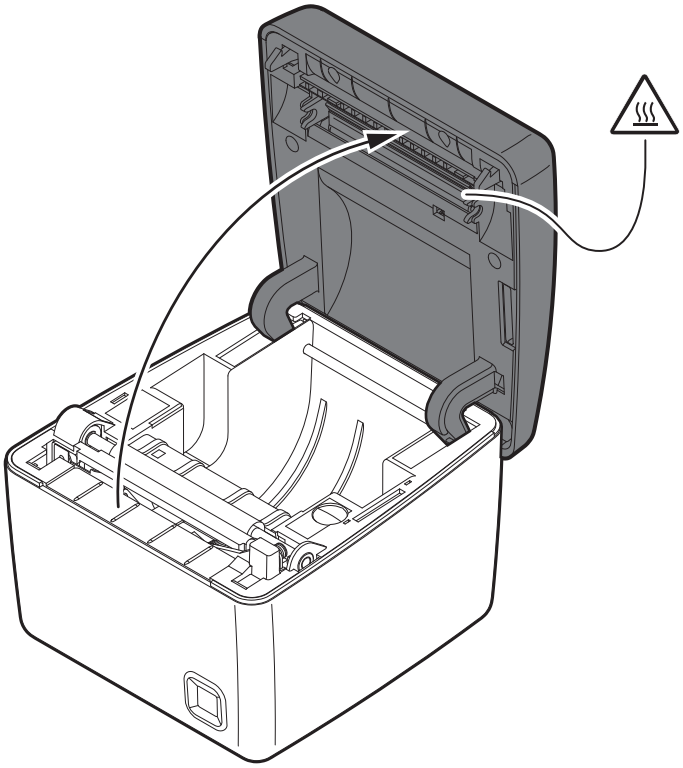

Open the device cover.

5.3 Loading the paper roll

To change the paper proceed as follows. At every change of paper, check inside the device to locate and remove any scraps of paper.

1

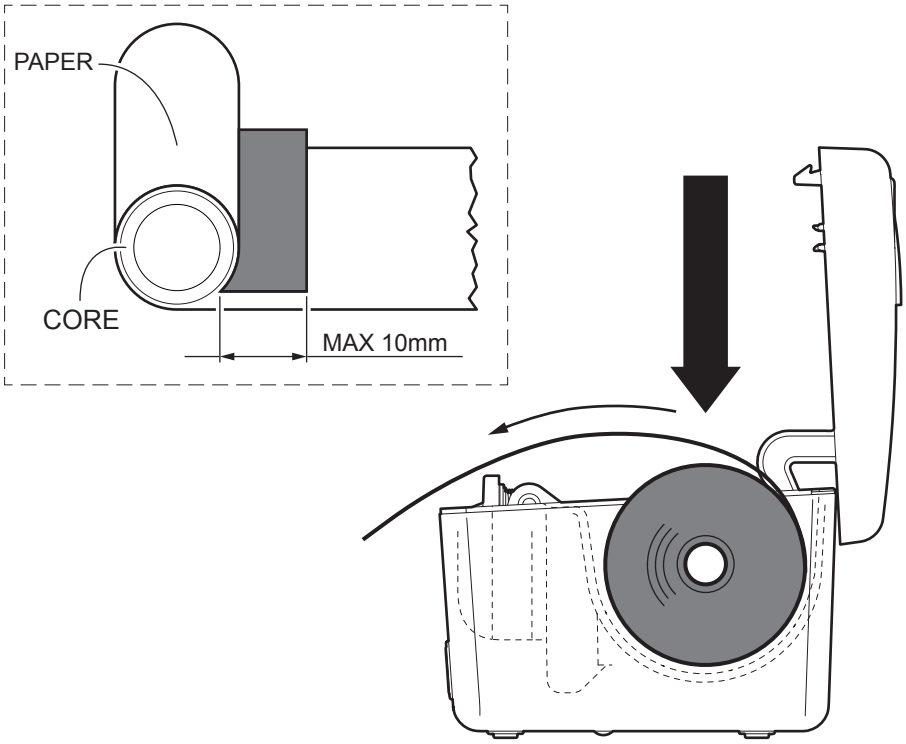

Open the device cover (see paragraph 5.2).
Place the roll in the paper compartment respecting the correct direction of rotation shown in figure and pull out the paper for a few centimetres.
Use paper rolls in accordance with the measure for the double roll up of the paper at the roll core.

2

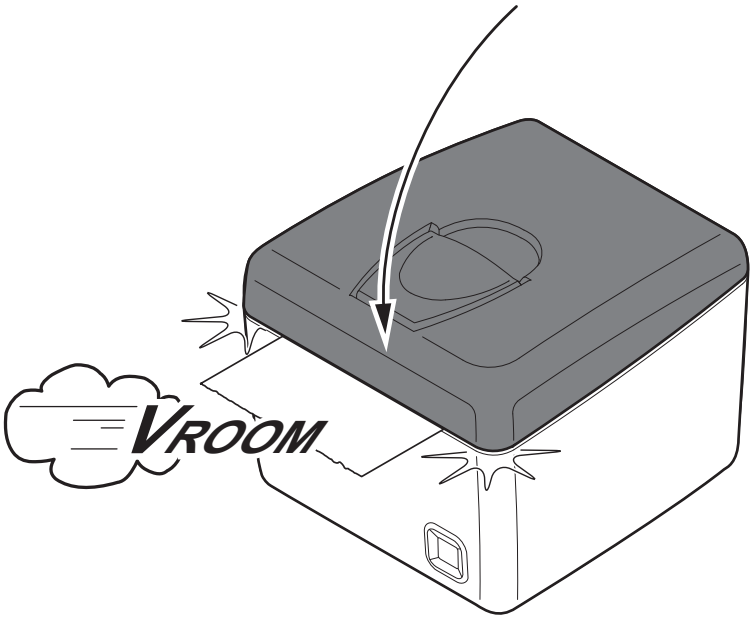

Close the device cover and wait until the paper is automatically loaded .

6 CONFIGURATION

6.1 Configuration by keys

To enter the configuration mode and print a setup report with the operating parameters of the device, proceed as follows.

1

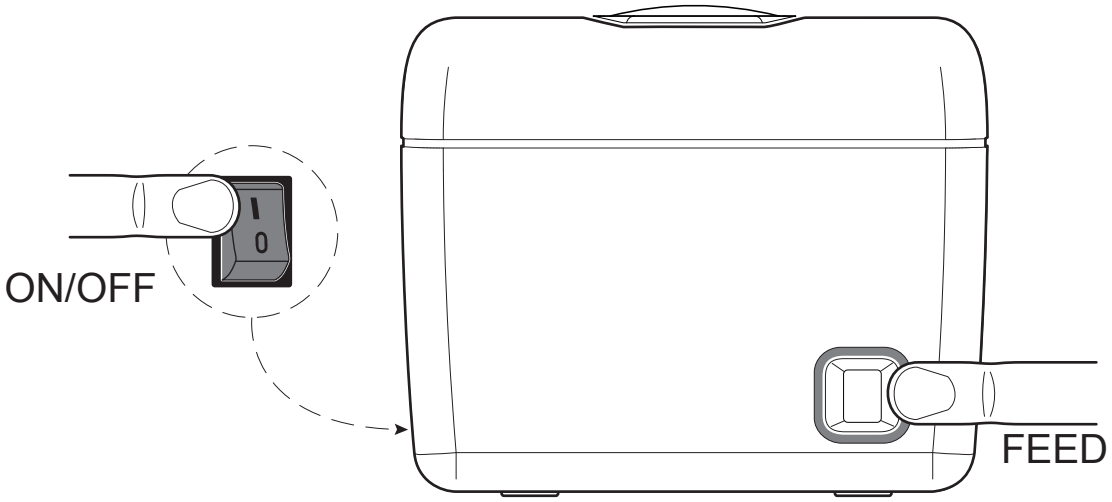

While pressing the FEED key,
switch on the device by pressing the ON/OFF key.

2

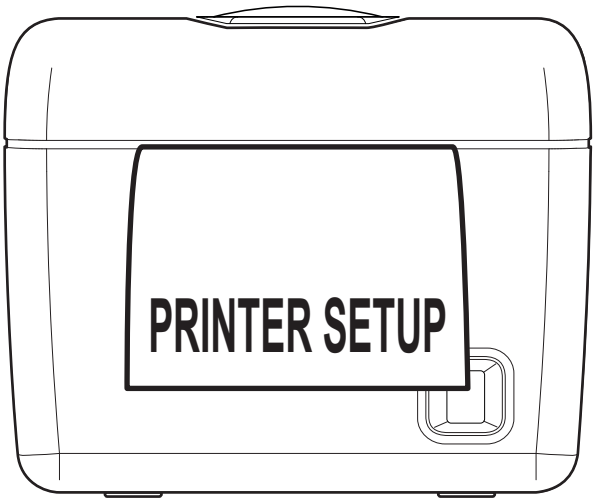

The device prints the report with the settings parameters.
Follow the instruction printed on paper to proceed with configuration procedure.

The following figures show the setup reports of the device. The shown values for parameters are sample values; for the list and the description of device operating parameters see the following paragraphs.

Q3x

DEVICE NAME AND FIRMWARE MODULES RELEASE

<device>
SCODE <code> - rel.
FCODE <code> - rel.

PRINTER SETUP

DEVICE STATUS

PRINTER TYPE ..... <device model>
PRINTING HEAD TYPE ..... <head model>
INTERFACE .....USB
PROGRAM MEMORY TEST.....OK
STATIC RAM TEST.....OK
EXTERNAL MEMORY TEST .....OK
CUTTER TEST.....OK
HEAD VOLTAGE [V] = 23.70
HEAD TEMPERATURE [°C] = 25
POWER ON COUNTER = 4
PAPER PRINTED [cm] = 40
CUT COUNTER = 1

DEVICE CONFIGURATION PARAMETERS

Wireless..... : **OFF**

RS232 Baud Rate ..... : **19200 bps**
RS232 Data Length..... : **8 bits/chr**
RS232 Parity..... : **None**
RS232 Handshaking ..... : **Xon/Xoff**
Busy Condition ..... : **RxFull**
USB Address Number ..... : **0**
USB Virtual COM..... : **Disabled**
Autofeed ..... : **CR Disabled**
Print Mode ..... : **Normal**
Chars / inch ..... : **A=15 B=20 cpi**
Speed / Quality..... : **Normal**
Black Mark Alignment..... : **Enabled**
Black Mark Threshold..... : **40%**
Black Mark Distance [mm]..... : **+15**
PaperEnd Buffer Clear ..... : **Disabled**
Font Type..... : **International**
Code Table [num] ..... : **00**
USB Virtual COM..... : **Disabled**
Print Density..... : **0%**

KEYS FUNCTIONS

[PUSH] *key to enter setup*
[FAST PUSH] *key to skip setup*

Q3x ETH

DEVICE NAME AND FIRMWARE MODULES RELEASE

```
<device>
SCODE <code>          -   rel.
FCODE <code>          -   rel.
```

PRINTER SETUP

DEVICE STATUS

```
PRINTER TYPE ............................ <device model>
PRINTING HEAD TYPE ................... <head model>
INTERFACE ..........................................ETHERNET
PROGRAM MEMORY TEST.................OK
STATIC RAM TEST.............................OK
EXTERNAL MEMORY TEST ................OK
CUTTER TEST.....................................OK
HEAD VOLTAGE              [V]   =  23.70
HEAD TEMPERATURE        [°C]   =  25
POWER ON COUNTER              =  4
PAPER PRINTED             [cm]   =  40
CUT COUNTER                   =  1
```

DEVICE CONFIGURATION PARAMETERS

```
[Network configuration]
DHCP Client ............................ :  Disabled

IP Address ............................... :  192.168.  10.  52
Subnet Mask ............................ :  255.255.255.   0
Default Gateway ....................... :  192.168.   0.   5

[Ethernet]
MAC Address Ethernet............... :  00-00-00-00-00-00

Autofeed ..................................... :  CR Disabled
Print Mode ................................... :  Normal
Chars / inch ................................ :  A=15  B=20 cpi
Speed / Quality............................ :  Normal
Black Mark  Alignment..................... :  Enabled
Black Mark  Threshold..................... :  40%
Black Mark  Distance [mm]............ :  +15
PaperEnd Buffer Clear ................... :  Disabled
Font Type..................................... :  International
Code Table [num] ........................... :  00
Print Density.................................. :  0%
```

KEYS FUNCTIONS

[PUSH] *key to enter setup*
[FAST PUSH] *key to skip setup*

Q3x Wi-Fi

DEVICE NAME AND FIRMWARE MODULES RELEASE

<device>

SCODE <code> - rel.

FCODE <code> - rel.

PRINTER SETUP

DEVICE STATUS

PRINTER TYPE ..... <device model>
PRINTING HEAD TYPE ..... <head model>
INTERFACE .....USB
PROGRAM MEMORY TEST.....OK
STATIC RAM TEST.....OK
EXTERNAL MEMORY TEST .....OK
CUTTER TEST.....OK
HEAD VOLTAGE [V] = 23.70
HEAD TEMPERATURE [°C] = 25
POWER ON COUNTER = 4
PAPER PRINTED [cm] = 40
CUT COUNTER = 1

DEVICE CONFIGURATION PARAMETERS

[Network configuration]
DHCP Client ..... : **Disabled**

IP Address ..... : **192.168. 10. 52**
Subnet Mask ..... : **255.255.255. 0**
Default Gateway ..... : **192.168. 0. 5**

[Wi-Fi]
WiFi SSID..... : **Custom**
Security Type..... : **NONE**
Wireless..... : **ON**
MAC Address WiFi ..... : **00-00-00-00-00-00**

Wireless..... : **ON**

RS232 Baud Rate ..... : **19200 bps**
RS232 Data Length..... : **8 bits/chr**
RS232 Parity ..... : **None**
RS232 Handshaking ..... : **Xon/Xoff**
Busy Condition ..... : **RxFull**
USB Address Number ..... : **0**
USB Virtual COM..... : **Disabled**
Autofeed ..... : **CR Disabled**
Print Mode ..... : **Normal**
Chars / inch ..... : **A=15 B=20 cpi**
Speed / Quality..... : **Normal**
Black Mark Alignment..... : **Enabled**
Black Mark Threshold..... : **40%**
Black Mark Distance [mm]..... : **+15**
PaperEnd Buffer Clear ..... : **Disabled**
Font Type..... : **International**
Code Table [num] ..... : **00**
USB Virtual COM..... : **Disabled**
Print Density..... : **0%**

KEYS FUNCTIONS

[PUSH] *key to enter setup*
[FAST PUSH] *key to skip setup*

Q3x BTH

DEVICE NAME AND FIRMWARE MODULES RELEASE

<device>
SCODE <code> - rel.
FCODE <code> - rel.

PRINTER SETUP

DEVICE STATUS

PRINTER TYPE			<device model>
PRINTING HEAD TYPE			<head model>
INTERFACE			BLUETOOTH
PROGRAM MEMORY TEST			OK
STATIC RAM TEST			OK
EXTERNAL MEMORY TEST			OK
CUTTER TEST			OK
HEAD VOLTAGE	[V]	=	23.70
HEAD TEMPERATURE	[°C]	=	25
POWER ON COUNTER		=	4
PAPER PRINTED	[cm]	=	40
CUT COUNTER		=	1
BT PRINTER ID		=	<dispositivo_n. di serie>
PAIRING BT PIN		=	1234
BT BUILD VERSION		=	121016A IDPS

DEVICE CONFIGURATION PARAMETERS

Wireless	**ON**
BT AutoReconnect	**Disabled**
Pairing BT	**Disabled**
RS232 Baud Rate	**19200 bps**
RS232 Data Length	**8 bits/chr**
RS232 Parity	**None**
RS232 Handshaking	**Xon/Xoff**
Busy Condition	**RxFull**
USB Address Number	**0**
USB Virtual COM	**Disabled**
Autofeed	**CR Disabled**
Print Mode	**Normal**
Chars / inch	**A=15 B=20 cpi**
Speed / Quality	**Normal**
Black Marck Alignment	**Enabled**
Black Marck Threshold	**40%**
Black Marck Distance [mm]	**+15**
PaperEnd Buffer Clear	**Disabled**
Font Type	**International**
Code Table [num]	**00**
USB Virtual COM	**Disabled**
Print Density	**0%**

KEYS FUNCTIONS

[PUSH] *key to enter setup*
[FAST PUSH] *key to skip setup*

6.2 Configuration by software

The setup parameters can be set by using the “PrinterSet” software tool available on www.custom4u.it.
For a detailed description of the device operating parameters see the following paragraphs.
To configure the device by software, proceed as follows:

1

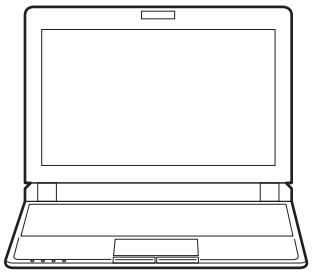

Connect the device to a PC directly
(see paragraph 4.1), without using HUB devices.

2

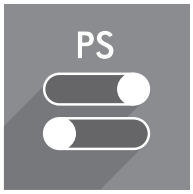

Start “PrinterSet” software tool.

3

Click on LOAD > FROM DEVICE and select
the device connected to the PC.

4

Click on SETUP to access the operating parameteres of
the device to be configured.

5

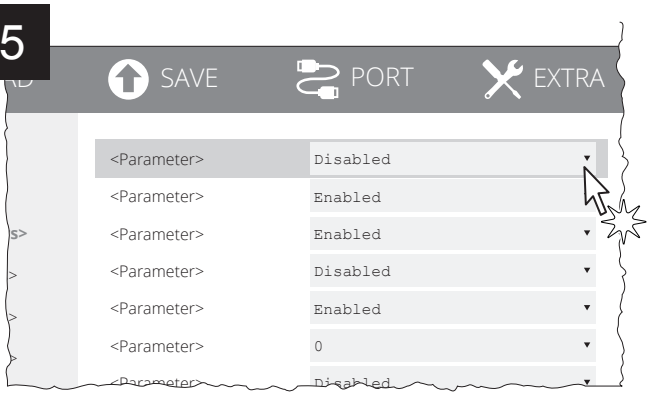

Make the desired changes to the
device operating parameters.

6

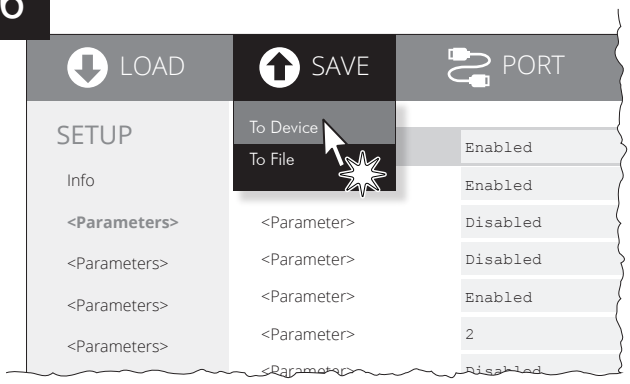

Click on SAVE > TO DEVICE
to make the changes made effective.

ATTENTION:
During saving, it is strongly discouraged to disconnect the communication cable or to remove the power supply of the PC or the device.

6.3 Device status

The device operating status is indicated in the configuration print-out in which, next to the name of the components displayed, the following information is given:

PRINTER TYPE	device model
PRINTING HEAD TYPE	print head model
INTERFACE	interface present
PROGRAM MEMORY TEST	OK appears if functioning and NOT OK if faulty
STATIC RAM TEST	OK appears if functioning and NOT OK if faulty
EXTERNAL MEMORY TEST	OK appears if functioning and NOT OK if faulty
CUTTER TEST	OK appears if functioning and NOT OK if faulty
HEAD VOLTAGE	voltage of the head
HEAD TEMPERATURE	temperature of the head
POWER ON COUNTER	number of power-ups made
PAPER PRINTED	centimetres of paper printed
CUT COUNTER	number of cuts performed
BT PRINTER ID *	device identifier
PAIRING BT PIN *	device password
BT BUILD VERSION *	firmware release of the Bluetooth module

NOTE: * : Only for Q3x BTH.

6.4 Communication parameters

The parameters marked with the symbol D are the default values.
Settings remain active even after the device has been turned off

RS232 BAUD RATE	Communication speed of the serial interface: 1200 19200 D 2400 38400 4800 57600 9600 115200 Parameter valid only with serial interface.
RS232 DATA LENGTH	Number of bit used for characters encoding: 7 bits/char 8 bits/char D Parameter valid only with serial interface.
RS232 PARITY	Bit for the parity control of the serial interface: None D = parity bit omitted Even = even value for parity bit Odd = odd value for parity bit Parameter valid only with serial interface.
RS232 HANDSHAKING	Handshaking: XON/XOFF D = software handshaking Hardware = hardware handshaking (CTS/RTS) Parameter valid only with serial interface. NOTE: When the receive buffer is full, if handshaking is set to XON/XOFF, the device sends the XOFF (0x13) on the serial port. When the receive buffer has cleared once again, if handshaking is set to XON/XOFF, the device sends the XON (0x11) on the serial port.
BUSY CONDITION	Activation mode for Busy signal: OffLine/ RXFull = busy signal is activated when the device is both in OffLine status and the buffer is full RXFull D = busy signal is activated when the buffer is full Parameter valid only with serial interface.
USB ADDRESS NUMBER	Numerical address code for the univocal identification of the USB device (in case of more than a USB device connected with the same PC): 0 D 2 4 6 8 1 3 5 7 9

USB VIRTUAL COM	Setting the USB port as a virtual serial port: Disabled [D] = virtual COM disabled Enabled = virtual COM enabled NOTE: To use this configuration it is necessary to install an addictional driver (see the paragraph 4.3).
DHCP CLIENT	Setting of the DHCP protocol: Disabled [D] = protocol disabled Enabled = protocol enabled This parameter can't be modified by keys.
IP ADDRESS	IP address of device; this parameter is assigned by the network administrator. This parameter can't be modified by keys.
SUBNET MASK	P address of device; this parameter is assigned by the network administrator. This parameter can't be modified by keys.
DEFAULT GATEWAY	This parameter identifies the Gateway IP address used to send applications to the external network. This parameter can't be modified by keys.
TCP PRINTER PORT	This parameter sets the TCP port number. This parameter is not printed on setup report.
SECURITY TYPE	Security Protocol: None [D] = protocol disabled WPA = WPA protocol enabled WPA2 = WAP2 protocol enabled This parameter can't be modified by keys.
Wi-Fi SSID	IP address of Wi-Fi; this parameter is assigned by the network administrator. This parameter can't be modified by keys.
Wi-Fi NET PASSWORD	This parameter sets the password for Wi-Fi communication. This parameter is not printed on setup report.
TCP TIMEOUT (x10 s)	This parameter sets the TCP timeout value expressed in seconds. This parameter is not printed on setup report.

WIRELESS	Activation of the Bluetooth or Wi-Fi communication: ON OFF [D] NOTE: If the WIRELESS parameter is set to ON (enabled) do not connect any communication cable to the device and disconnect all the communication cables from the device.
BT AUTORECONNECT	Setting the automatically connection function (only for Apple devices) Disabled [D] = AutoReconnect function disabled. To communicate with the printer must perform the pairing between the Apple device and the printer when communication is interrupted (power off, stand by, etc.). Enabled = AutoReconnect function enabled. The printer automatically attempts to restore the connection with the last device connected Apple whenever communication is interrupted (power off, stand by, etc.). Before enabling this function, you must perform the pairing between the Apple device and printer. NOTE: The parameter is printed only for Q3x BTH models.
PAIRING BT	Setting the paring function for the Bluetooth devices: Disabled [D] = pairing function disabled. No passkey is requested to make association Enabled = pairing function enabled. To set it entering the pincode/passkey indicated on the setup report “Pairing BT PIN” (1234). NOTES: The parameter is printed only for Q3x BTH models. To communicate with Bluetooth devices Apple set the parameter to Disabled.
MAC ADDRESS	This is the number, provided by the constructor, that identifies the device; this number is univocal. This parameter can’t be modified by keys.

ATTENTION:
Any changes to network parameters will interrupt browser connection. If the server not responding you must reconnect to the new IP address set.

6.5 Operating parameters

This device allows the configuration of the parameters listed in the following table.
The parameters marked with the symbol D are the default values.
Settings remain active even after the device has been turned off and they are stored in non-volatile memory.

PRINT MODE	Printing mode: Normal D = enables printing in normal writing way Reverse = enables printing rotated 180 degrees
AUTOFEED	Setting of the Carriage Return character: CR disabled D = carriage Return disabled CR enabled = carriage Return enabled
CHARS / INCH	Font selection: A = 11 cpi, B = 15 cpi A = 15 cpi, B = 20 cpi D NOTE: CPI = Characters Per Inch
SPEED / QUALITY	Setting of printing speed and printing quality: Normal D High Quality
PAPEREND BUFFER CLEAR	Cleaning mode of the data in receive buffer, if the printing is stopped due to lack of paper: Disabled D = the data remain in the receive buffer. When the paper runs out, the device keeps the remaining data in the receive buffer and prints the remaining portion of the ticket after that the new paper is loaded. Enabled = when the paper runs out, all data in the receive buffer are deleted.
FONT TYPE	Setting of the font type: International D = Enables the use of the 256 characters font tables Chinese GB18030 = Enables the use of the chinese extended font GB18030-2000 Korean PC949 = Enables the use of the korean font PC949 When the “International” font is enabled, you need to choose the character code table (parameter “Code Table”). When the Chinese or Korean fonts is enabled, the selection of the character code table is suspended (parameter “Code Table”).

CODE TABLE [NUM]

Identifier number of the character code table to use.
The numeric value of the identifier is made up with the following two parameters for the setting of two digits for the tens and the units:

Code Table [num x 10]	Setting the digit for tens: 0 D 2 4 1 3 5
Code Table [num x 1]	Setting the digit for units: 0 D 2 4 6 8 1 3 5 7 9

NOTE:
See the paragraph 10.7 to learn about the character tables corresponding to the identification numbers set with this parameter.
The character tables set with this parameter are the same set with the command 0x1B 0x74 (refer to the commands manual of the device).

PRINT DENSITY

Adjusting the printing density:

-25% 0% D +25%
-12% +12%

NOTE:
The print quality is strongly influenced by the type of chemical treatment and the type of storage to which the thermal paper has been subjected, as well as by the weight of the same. It may therefore necessary to act on this parameter to obtain the desired print quality.

6.6 Alignment parameters

This device allows the configuration of the parameters listed in the following table.
The parameters marked with the symbol D are the default values.
Settings remain active even after the device has been turned off and they are stored in non-volatile memory.

BLACK MARK ALIGNMENT	Alignment management: Disabled D = the black mark alignment is not performed Enabled = the black mark alignment is performed
BLACK MARK THRESHOLD	Threshold value for the recognition of the presence of black mark by the black mark sensor: 0.75V 1.50V 2.25V 1.00V 1.75V D 2.50V 1.25V 2.00V 2.75V If the “Black Mark Alignment” parameter is disabled, this parameter is not printed.
BLACK MARK DISTANCE	“Black Mark Distance” is the minimum distance (in millimeters) between the upper edge of ticket and the black mark (see chapter 8). The numeric value of the distance is made up with the following four parameters for the setting of three digits (two for the integer part of the number, one for the decimal part and of the sign):

B. MARK DISTANCE [mm x 10]	Setting the digit for tens: 0 D 1 2
B. MARK DISTANCE [mm x 1] (1)	Setting the digit for units: 0 D 2 4 6 8 1 3 5 7 9
B. MARK DISTANCE [mm x .1]	Setting the digit for decimals: 0 D 2 4 6 8 1 3 5 7 9

NOTES:
For example, to set the black mark distance to 15 mm, modify the parameters as follows:

Black Mark Distance [mm x 10] = 1
Black Mark Distance [mm x 1] = 5
Black Mark Distance [mm x .1] = 0

If the “Black Mark Alignment” parameter is disabled, the parameters for the “Black Mark Distance” are not printed.

(1) : The values of “Black Mark Distance [mm x 1]” > 2 can be set only if “Black Mark Distance [mm x 10]” = 0 or 1

6.7 Hexadecimal dump

This function is used for the diagnosis of the characters received from the communications port. Characters are printed as hexadecimal code and the corresponding ASCII code (see below). Each line is preceded by a counter in hexadecimal that indicates the number of bytes received.

During the startup, if you hold down the FEED key, the printer enters the self-test routine and print the setup report.
The printer remains in standby until a key is pressed or characters are received through the communication port (Hexadecimal Dump mode). For each character sent, the receipt contain an indication of the hexadecimal and ASCII values (if the characters are underlined, the receive buffer is full). Shown below is an example of a Hexadecimal Dump:

HEXADECIMAL DUMP

```
31  32  33  34  35  ...        12345 ...
39  30  31  32  33  ...        90123 ...
37  38  39  75  69  ...        789ui ...
68  6B  6A  73  64  ...        hkjsd ...
73  64  66  6B  6A  ...        sdfkj ...
66  73  64  66  6B  ...        fsdfk ...
65  69  6F  79  75  ...        eioyu ...
6F  72  69  75  77  ...        oriuw ...
6F  75  77  65  72  ...        ouwer ...
77  65  72  69  6F  ...        werio ...
72  69  6F  75  77  ...        riouw ...
6B  6C  73  64  66  ...        klsdf ...
64  66  6B  73  64  ...        dfksd ...
73  64  66  6B  6A  ...        sdfkj ...
66  6B  F2  6A  73  ...        fk≥j ...
6A  6B  6C  68                 jklh
```

7 WIRELESS COMMUNICATION

Q3x BTH, Q3x Wi-Fi

The Bluetooth or Wi-Fi connectivity of the printer allows the wireless printing from a PC (e.g. using a text editor or third-part software) or from a mobile device Android, iOS and Windows Phone after installing the application “CustomPrint”, downloadable from the web site www.custom.biz.
To perform the wireless printing with a printer equipped with Bluetooth or Wi-Fi connectivity is needed to pair with device.

NOTE: The windows used in this paragraph may be different from the screens that appear on the device used for printing and may vary depending on the version of the operating system.

7.1 Bluetooth pairing with Windows devices

Q3x BTH

1

Write down the 16-digits serial number indicated on the label of the printer (see paragraph 3.4).

2

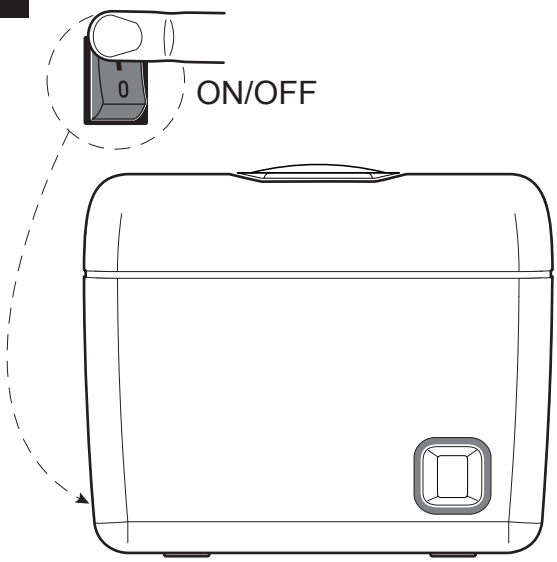

Turn on the printer (see paragraph 5.1).

3

Wireless.....: **ON**

BT AutoReconnect.....: **Disabled**

Configure the parameters “Wireless” to “ON” and “BT AutoReconnect” to “Disabled” in one of the modes described in the previous paragraphs (see chapter 6).

4

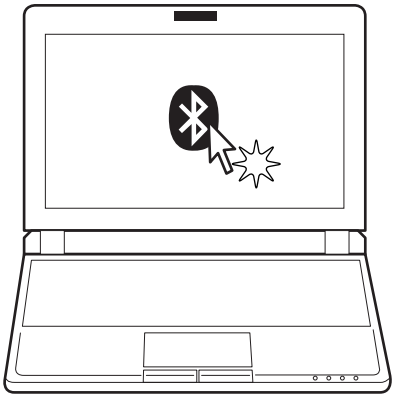

On the PC status bar click the Bluetooth icon.

5

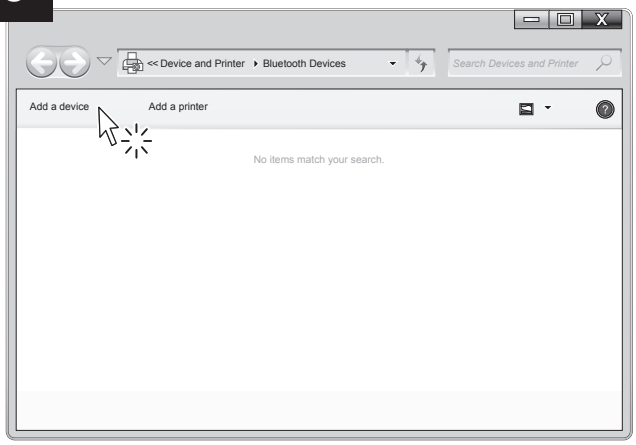

In the window that opens,
click ADD DEVICE.

6

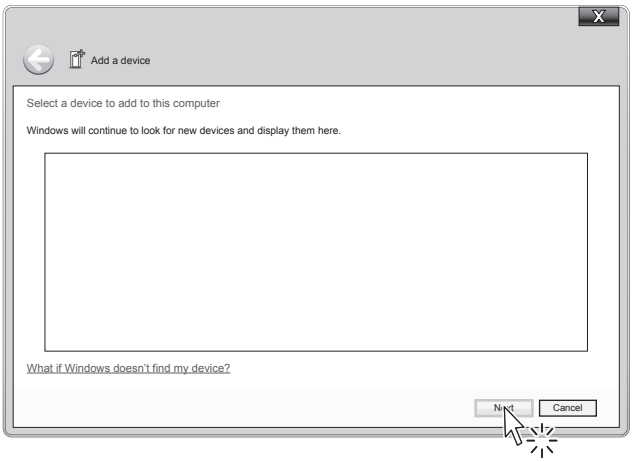

Click the NEXT key.

7

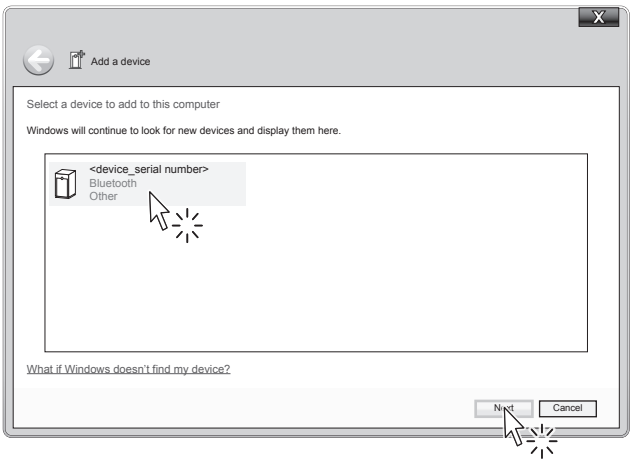

Locate your Bluetooth printer in the list of proposed devices (<device_serial number>) and select it with a click.

8 “Pairing BT” = Disabled

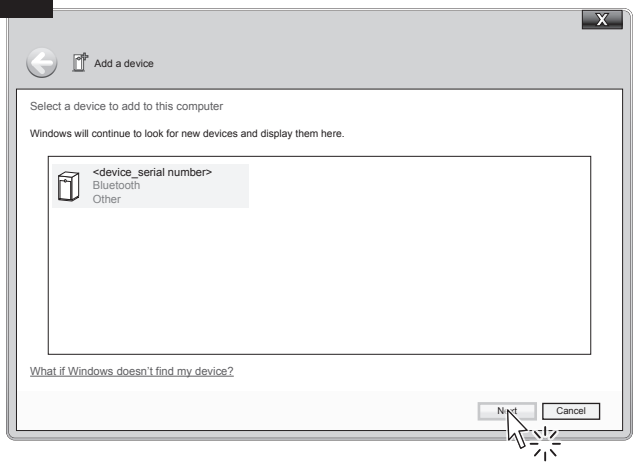

If the parameter “Pairing BT” of the printer is set to “Disabled” (see paragraph 6.4), click the NEXT key to confirm the pairing and skip to step 11.

9 “Pairing BT” = Enabled

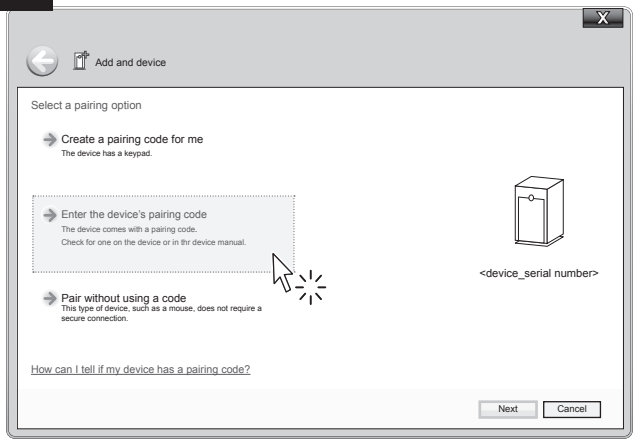

If the parameter “Pairing BT” of the printer is set to “Enabled” (see paragraph 6.4), click ENTER THE DEVICE’S PAIRING CODE.

10

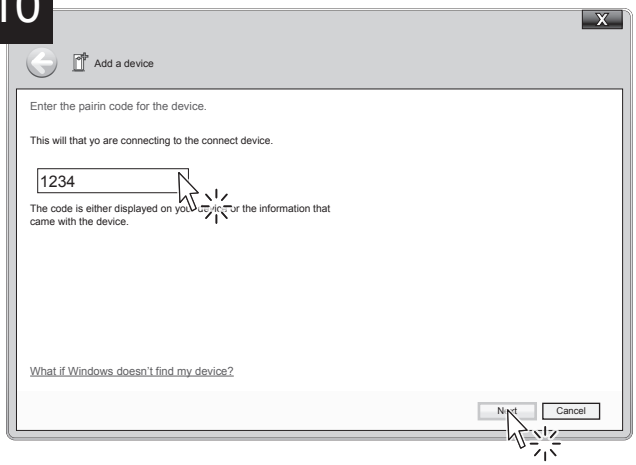

Enter the PIN (1234) and
click the NEXT key.

11

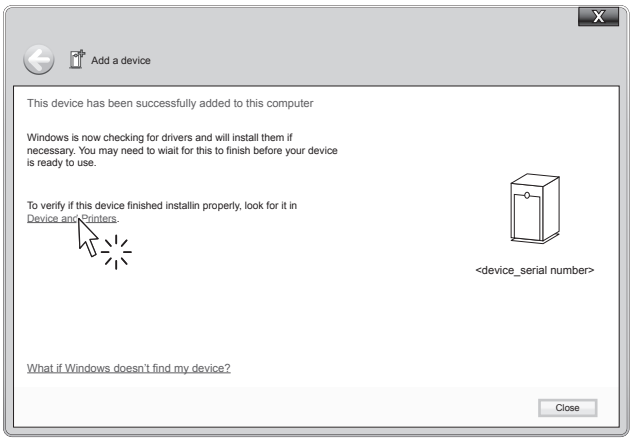

In the confirmation message that appears, click DEVICE AND PRINTERS.

12

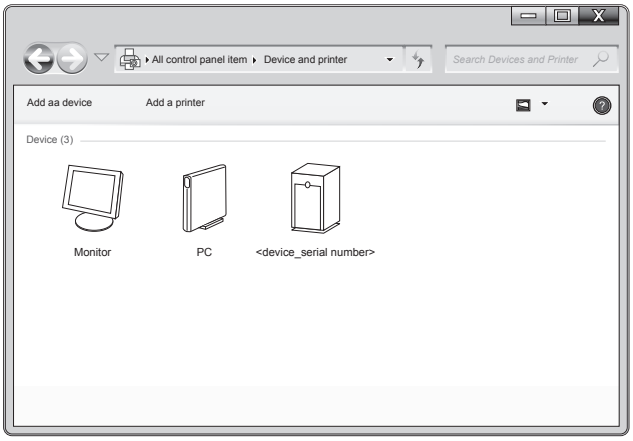

Check that your device appears in the list of paired devices.

NOTE: Once that has occurred the association (pairing) between the host and printer, this remains active even in the event of switching off, interruption of communication, etc.

7.2 Bluetooth pairing with macOS devices

Q3x BTH

1

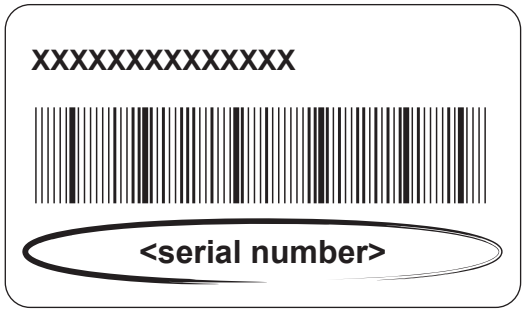

Write down the 16-digits serial number indicated on the label of the printer (see paragraph 3.4).

2

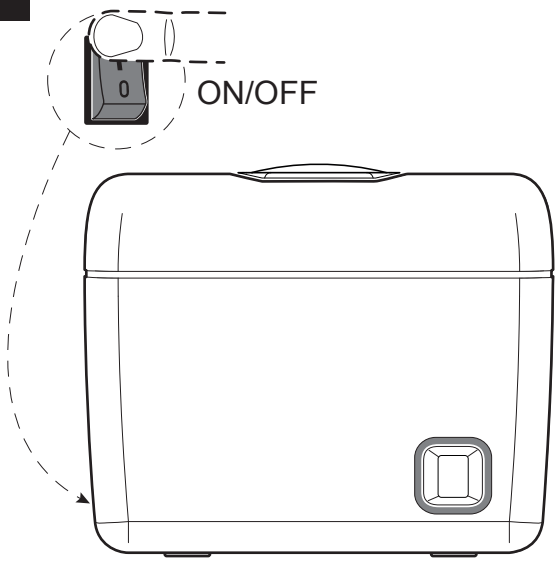

Turn on the printer (see paragraph 5.1).

3

Wireless.....: **ON**

BT AutoReconnect.....: **Disabled**

Configure the parameters “Wireless” to “ON” and “BT AutoReconnect” to “Disabled” in one of the modes described in the previous paragraphs (see chapter 6).

4

On the PC status bar click the Bluetooth icon.

5

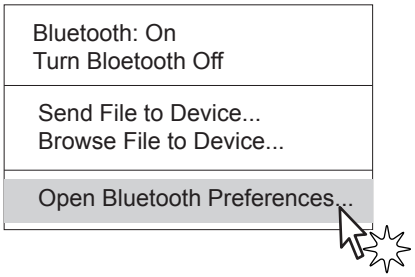

In the dropdown menu click OPEN BLUETOOTH PREFERENCES.

6 **“Pairing BT” = Disabled**

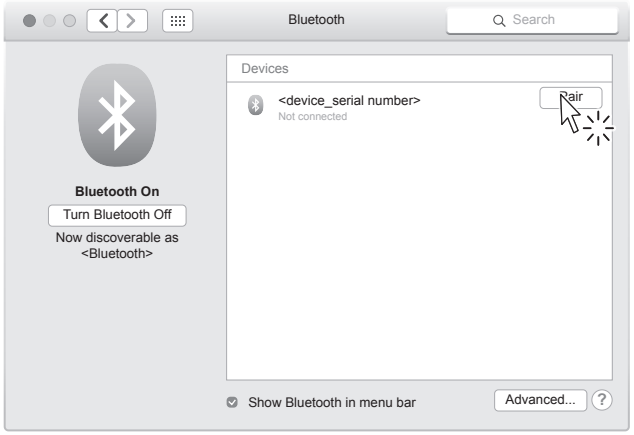

If the parameter “Pairing BT” of the printer is set to “Disabled” (see paragraph 6.4), locate your printer (<device_serial number>) and select it with a click. Click the NEXT key to confirm the pairing and skip to step 10.

7 “Pairing BT” = Enabled

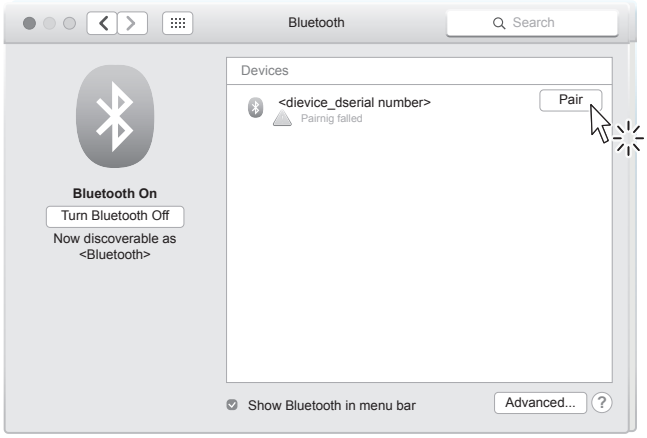

If the parameter “Pairing BT” of the printer is set to “Enabled” (see paragraph 6.4), click the PAIR key. An error message appears on the screen. Click the PAIR key again.

8

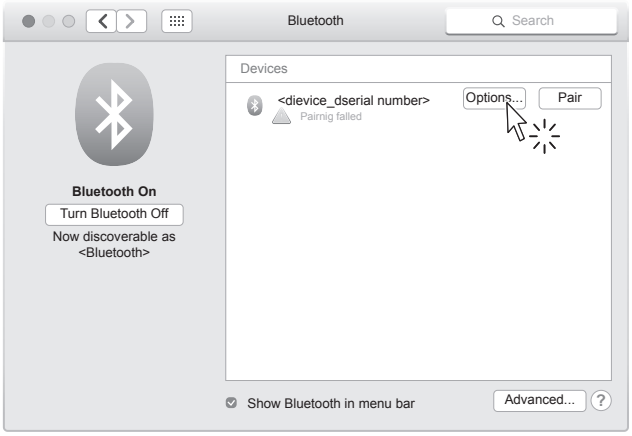

Click OPTIONS key.

9

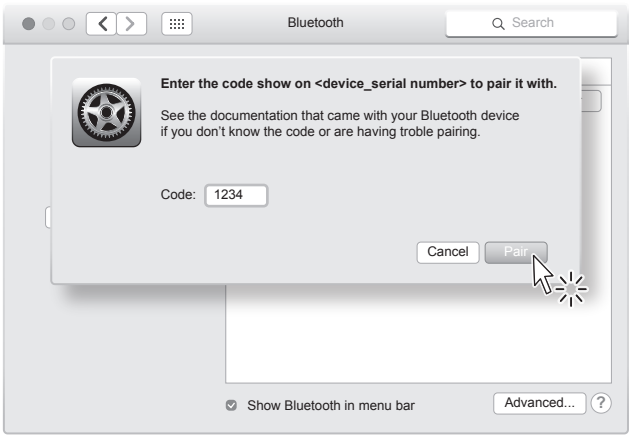

Enter the PIN (1234) and click PAIR key to confirm.

10

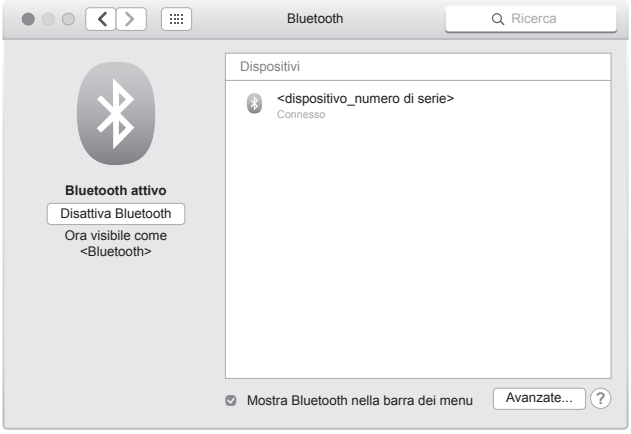

Verificare che il vostro dispositivo figuri nell'elenco dei dispositivi abbinati.

NOTE: Once that has occurred the association (pairing) between the host and printer, this remains active even in the event of switching off, interruption of communication, etc.

7.3 Bluetooth pairing with Linux devices

Q3x BTH

1

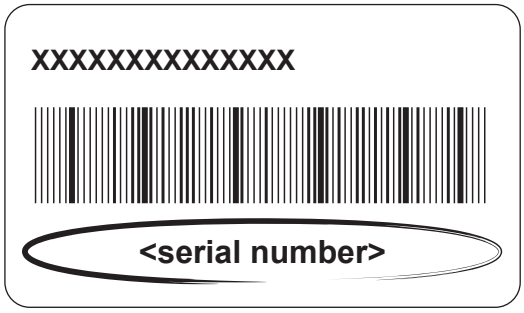

Write down the 16-digits serial number indicated on the label of the printer (see paragraph 3.4).

2

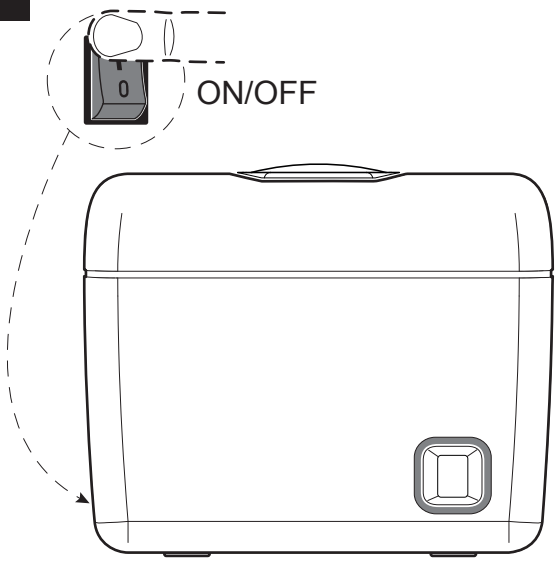

Turn on the printer (see paragraph 5.1).

3

Wireless.....: **ON**

BT AutoReconnect.....: **Disabled**

Configure the parameters “Wireless” to “ON” and “BT AutoReconnect” to “Disabled” in one of the modes described in the previous paragraphs (see chapter 6).

4

On the PC status bar click the Bluetooth icon.

5

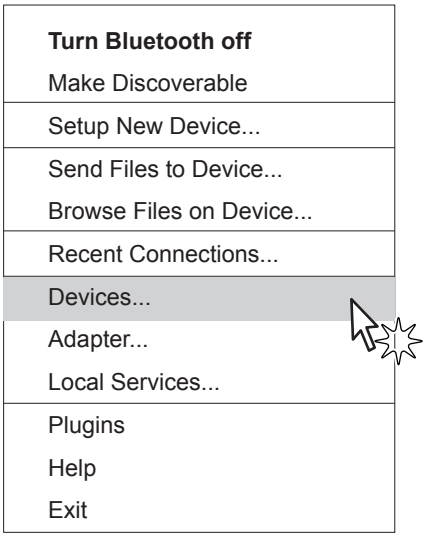

In the dropdown menu click DEVICES.

6

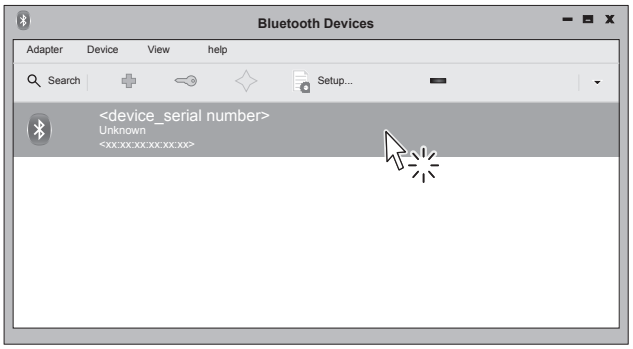

Locate your printer (<device_serial number>) and select it with a click.

7 “Pairing BT” = Disabled

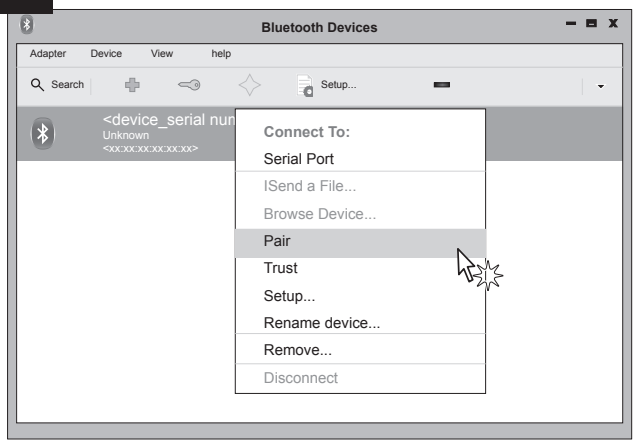

In the dropdown menu, click the PAIR key.
If the parameter “Pairing BT” of the printer is set to “Disabled” (see paragraph 6.4), skip to step 9.

8 “Pairing BT” = Enabled

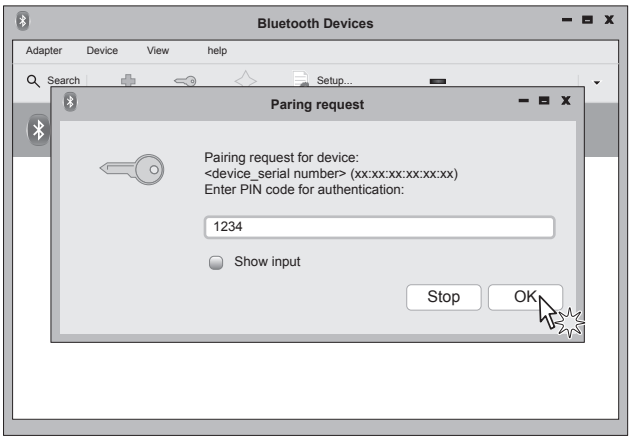

If the parameter “Pairing BT” of the printer is set to “Enabled” (see paragraph 6.4), enter the PIN (1234) and click OK to confirm.

9

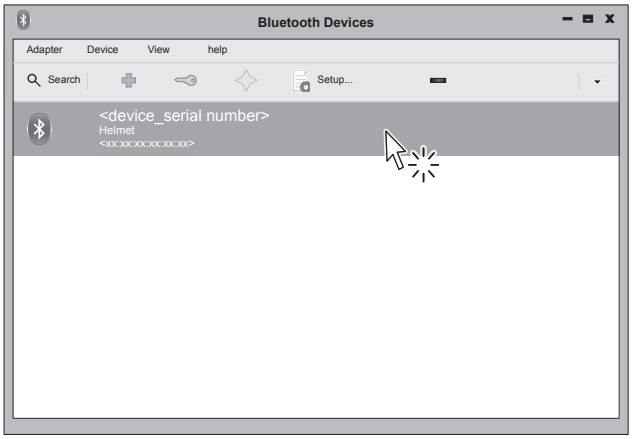

Check that your device appears in the list of paired devices.

NOTE: Once that has occurred the association (pairing) between the host and printer, this remains active even in the event of switching off, interruption of communication, etc.

7.4 Bluetooth pairing with Android devices

Q3x BTH

1

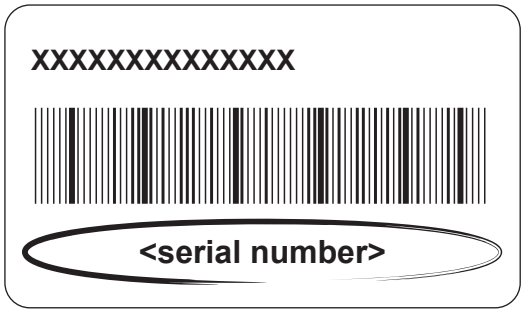

Write down the 16-digits serial number indicated on the label of the printer (see paragraph 3.4).

2

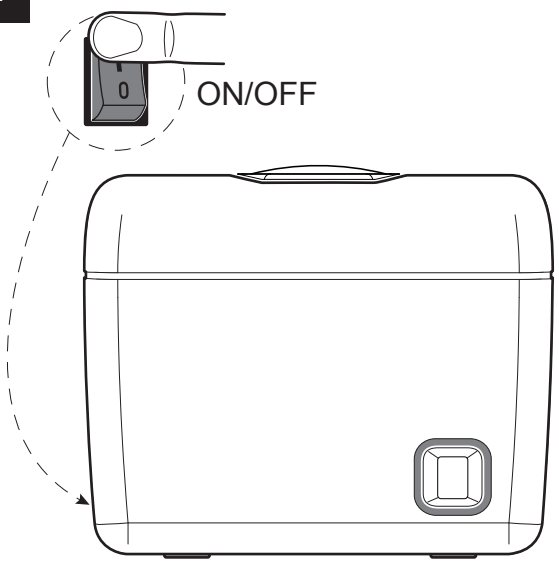

Turn on the printer (see paragraph 5.1).

3

Wireless.....: **ON**

BT AutoReconnect.....: **Disabled**

Configure the parameters “Wireless” to “ON” and “BT AutoReconnect” to “Disabled” in one of the modes described in the previous paragraphs (see chapter 6).

4

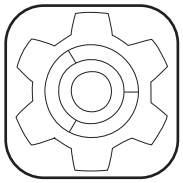

Press the SETTINGS icon on your Android device.

5

Press the Bluetooth icon.

6

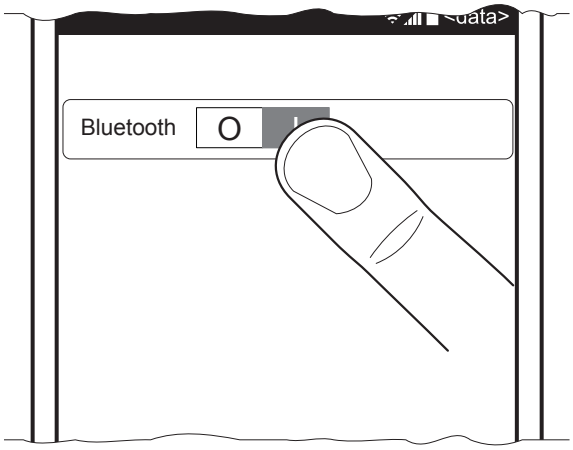

Move the switch to ON to enable the Bluetooth communication and start searching for available devices .

7

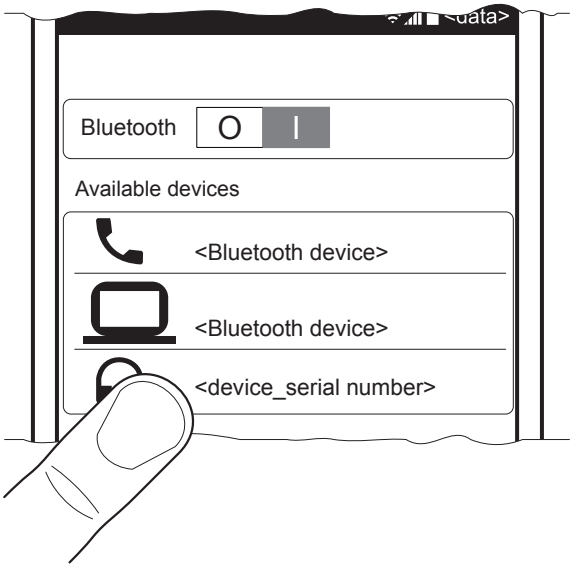

Locate your printer (<device_serial number>) and select it with a click.

8

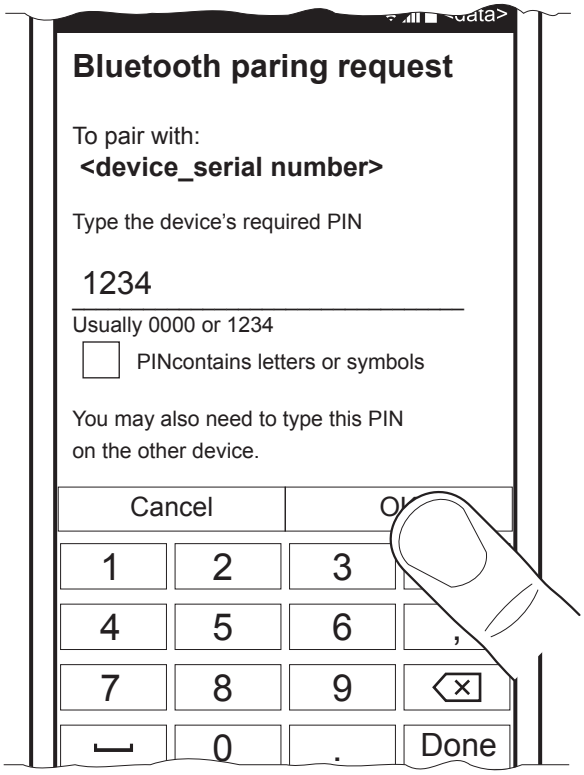

If the parameter "Pairing BT" of the printer is set to "Enabled" (see paragraph 6.4), enter the PIN (1234) and click OK to confirm.
If the parameter "Pairing BT" of the printer is set to "Disabled" (see paragraph 6.4), pairing is automatically performed.

9

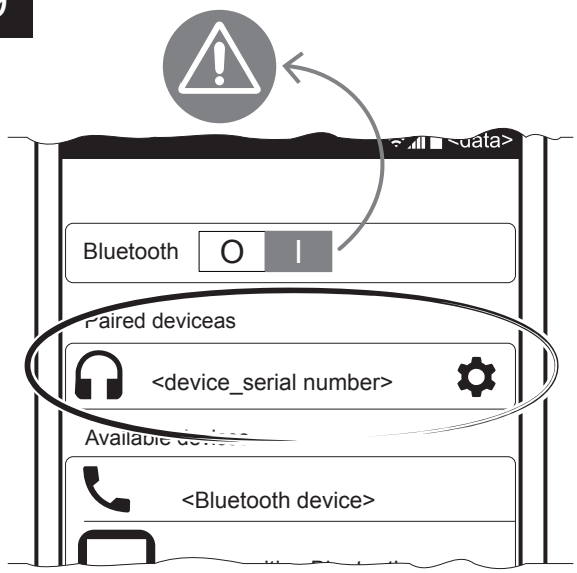

Once pairing is completed, do not turn off Bluetooth communication. Otherwise, communication will be interrupted.

7.5 Bluetooth pairing with iOS devices

Q3x BTH

1

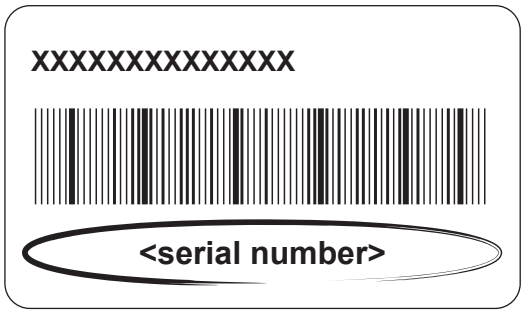

Write down the 16-digits serial number indicated on the label of the printer (see paragraph 3.4).

2

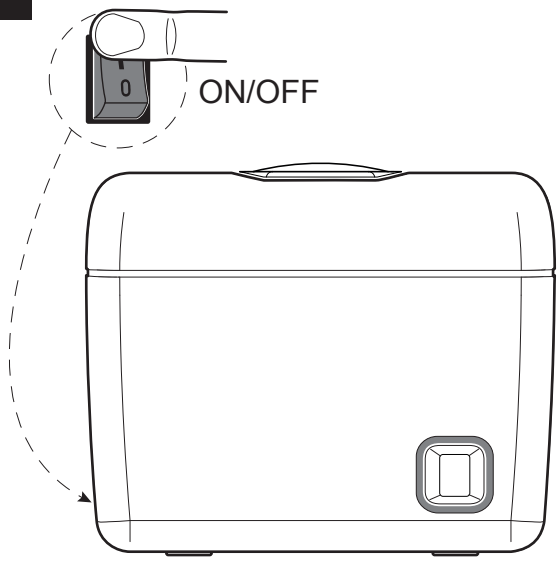

Turn on the printer (see paragraph 5.1).

3

Wireless.....: **ON**

BT AutoReconnect.....: **Disabled**

Configure the parameters “Wireless” to “ON” and “BT AutoReconnect” to “Disabled” in one of the modes described in the previous paragraphs (see chapter 6).

4

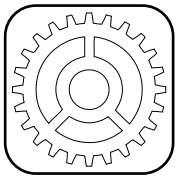

Press the SETTINGS icon, on your iOS device.

5

Press the Bluetooth icon.

6

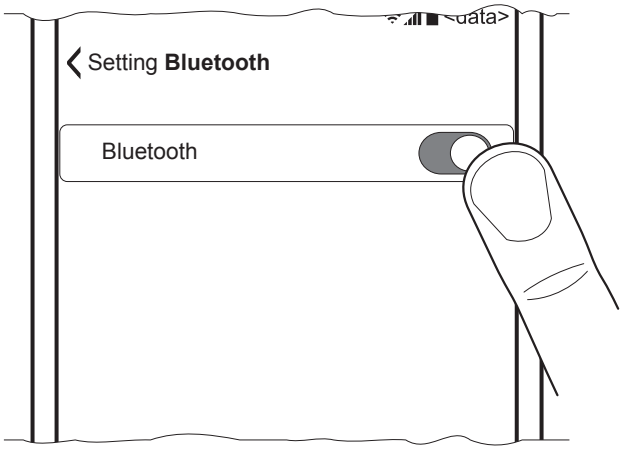

Move the switch to ON to enable the Bluetooth communication and start searching for available devices .

7

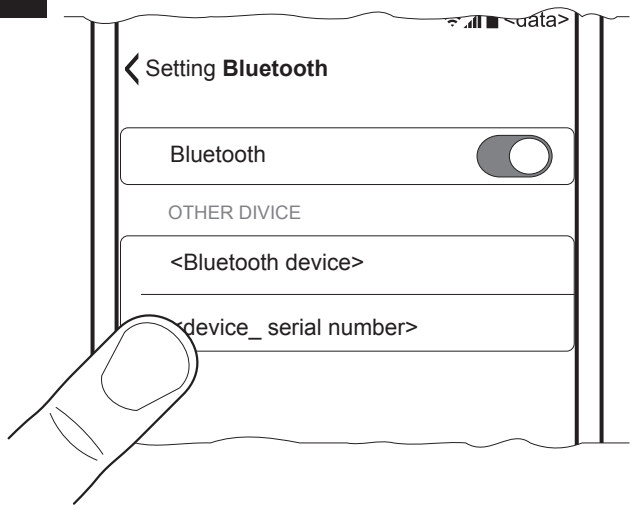

Locate your printer (<device_serial number>) and select it with a click.

8

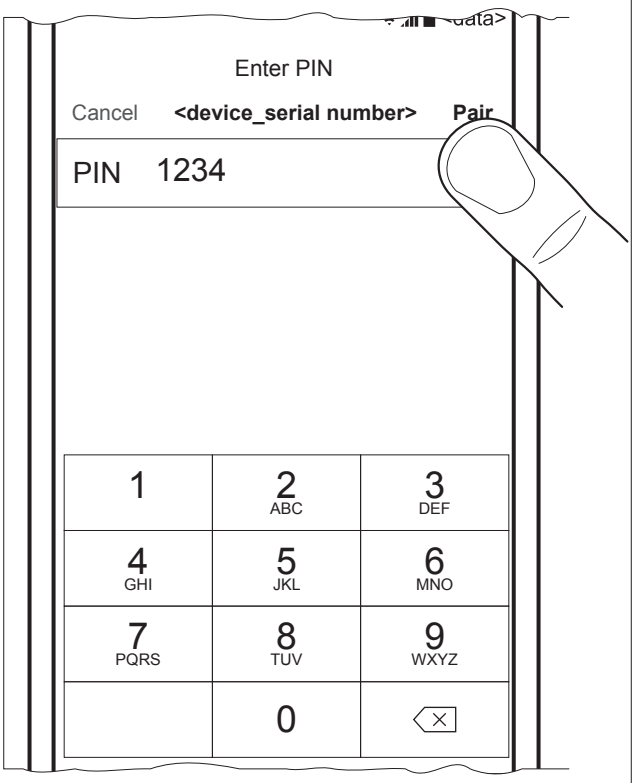

If the parameter “Pairing BT” of the printer is set to “Enabled” (see paragraph 6.4), enter the PIN (1234) and press the PAIR key to confirm.
If the parameter “Pairing BT” of the printer is set to “Disabled” (see paragraph 6.4), pairing is automatically performed.

9

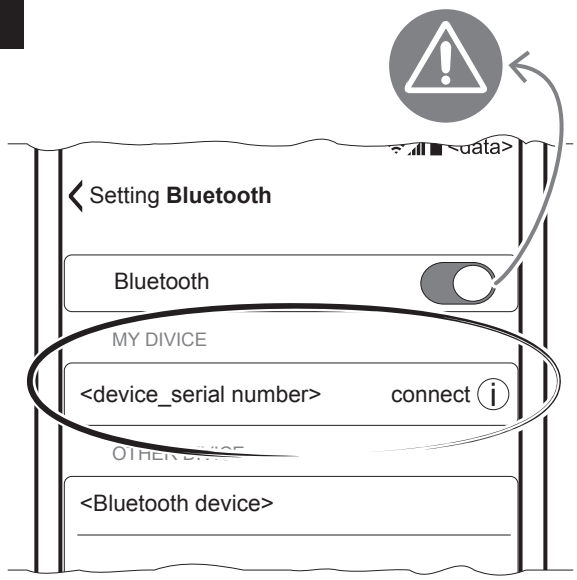

Once pairing is completed, do not turn off Bluetooth communication. Otherwise, communication will be interrupted.

7.6 Bluetooth pairing with Windows Phone devices

Q3x BTH

1

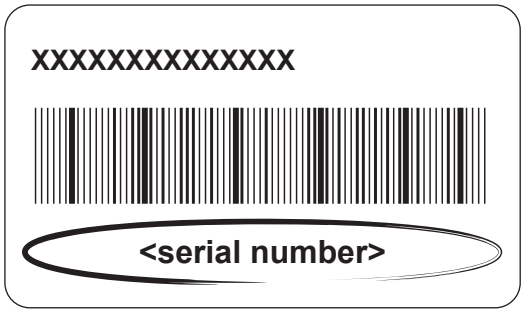

Write down the 16-digits serial number indicated on the label of the printer (see paragraph 3.4).

2

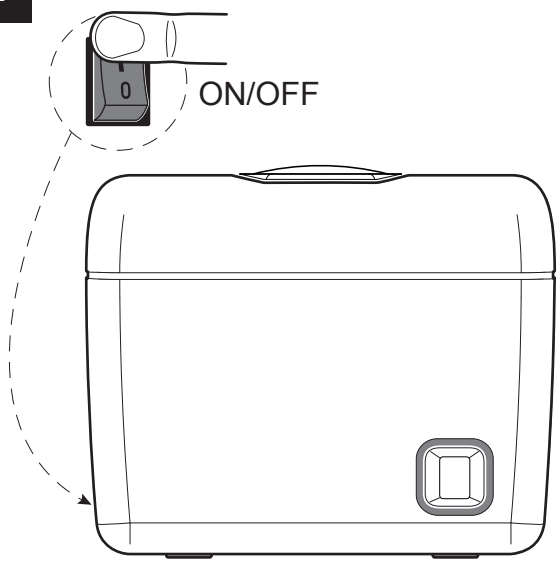

Turn on the printer (see paragraph 5.1).

3

Wireless.....: **ON**

BT AutoReconnect.....: **Disabled**

Configure the parameters “Wireless” to “ON” and “BT AutoReconnect” to “Disabled” in one of the modes described in the previous paragraphs (see chapter 6).

4

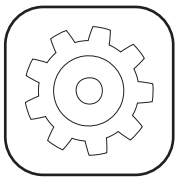

Press the SETTINGS icon on the WIndows device.

5

Bluetooth

Press the Bluetooth icon.

6

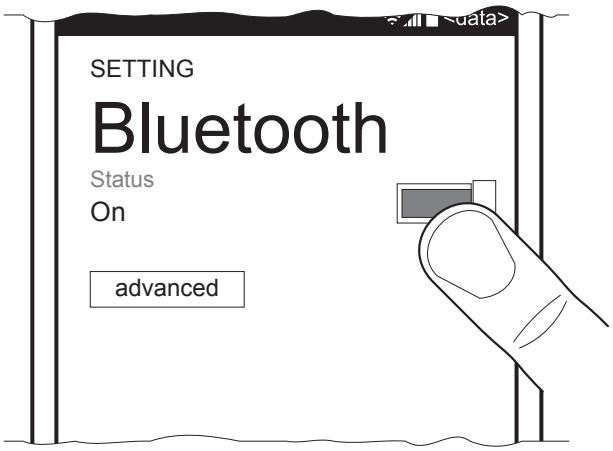

Move the switch to ON to enable the Bluetooth communication and start searching for for available devices.

7

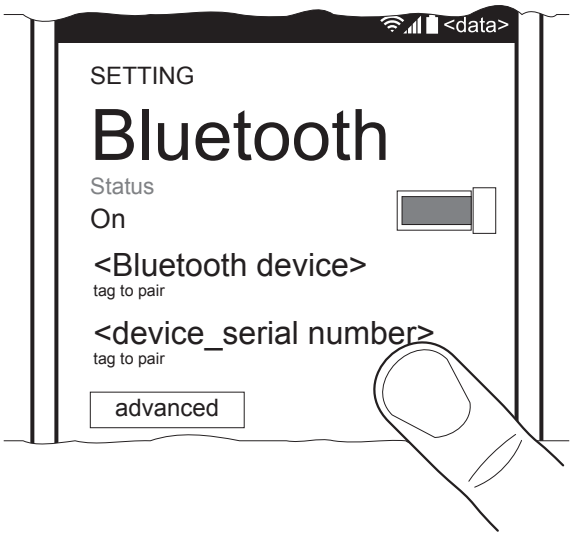

Locate your printer (<device_serial number>) and select it with a click.

8

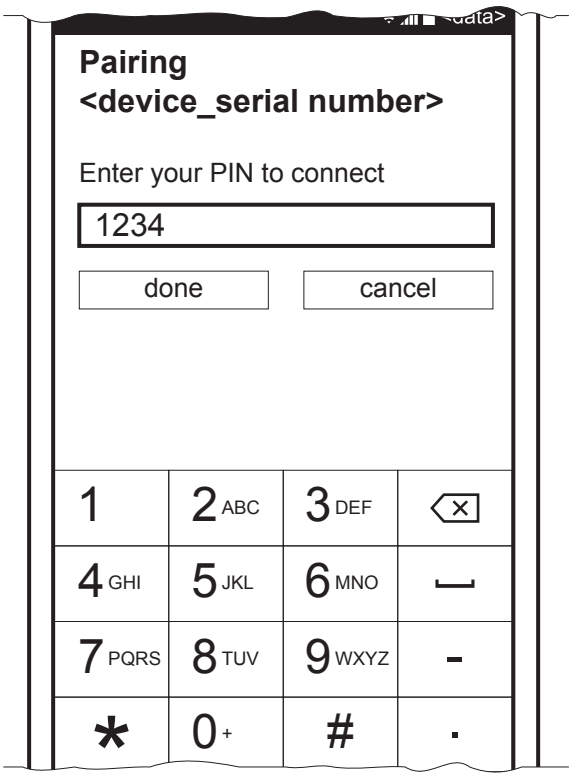

If the parameter “Pairing BT” of the printer is set to “Enabled” (see paragraph 6.4), enter the PIN (1234) and press the PAIR key to confirm.
If the parameter “Pairing BT” of the printer is set to “Disabled” (see paragraph 6.4), pairing is automatically performed.

9

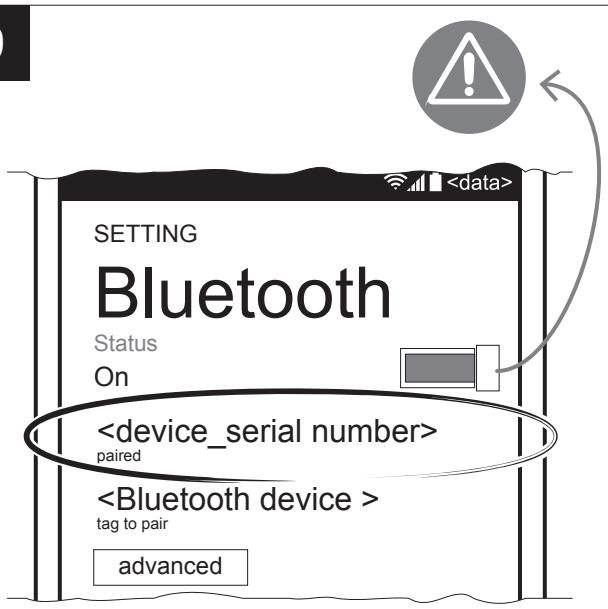

Once pairing is completed, do not turn off Bluetooth communication. Otherwise, communication will be interrupted.

7.7 Communication with Wi-Fi devices

Q3x Wi-Fi

To enable the operation of the device in wireless mode, the following communication parameters must be appropriately configured using one of the methods described in chapter 6:

- Wireless : ON
- Wi-Fi SSID : <IP address of Wi-Fi network>
- Wi-Fi Net Password : <password for Wi-Fi communication>

8 ALIGNMENT

Device is provided with a sensor for the use of alignment black mark printed on paper in order to handle roll of tickets with pre-printed fields and a fixed length.

The alignment sensor assembled on the device is “reflection” sensor: this kind of sensor emits a band of light and detects the quantity of light reflected to it. The presence of the black mark is therefore detected by the amount of light that returns to the sensor, considering that the light is reflected by the white paper and absorbed by the black mark.

The following paragraphs show how to correctly set the configuration parameters of device in order to assure the alignment.

8.1 Enable alignment

Device is provided with one sensor for alignment, placed on the on the internal side of the cover for paper compartment.

To guarantee the alignment, it is necessary enable the parameter “Black Mark Alignment” during the setup procedure (see chapter 6) and set the correct value of this parameter as described in the following table.

VALUE OF THE BLACK MARK ALIGNMENT PARAMETER	USING MODE OF SENSOR	BLACK MARK TYPE
Disabled	-	Alignment disabled
Enabled	Reflection	Black mark printed on the thermal side of paper

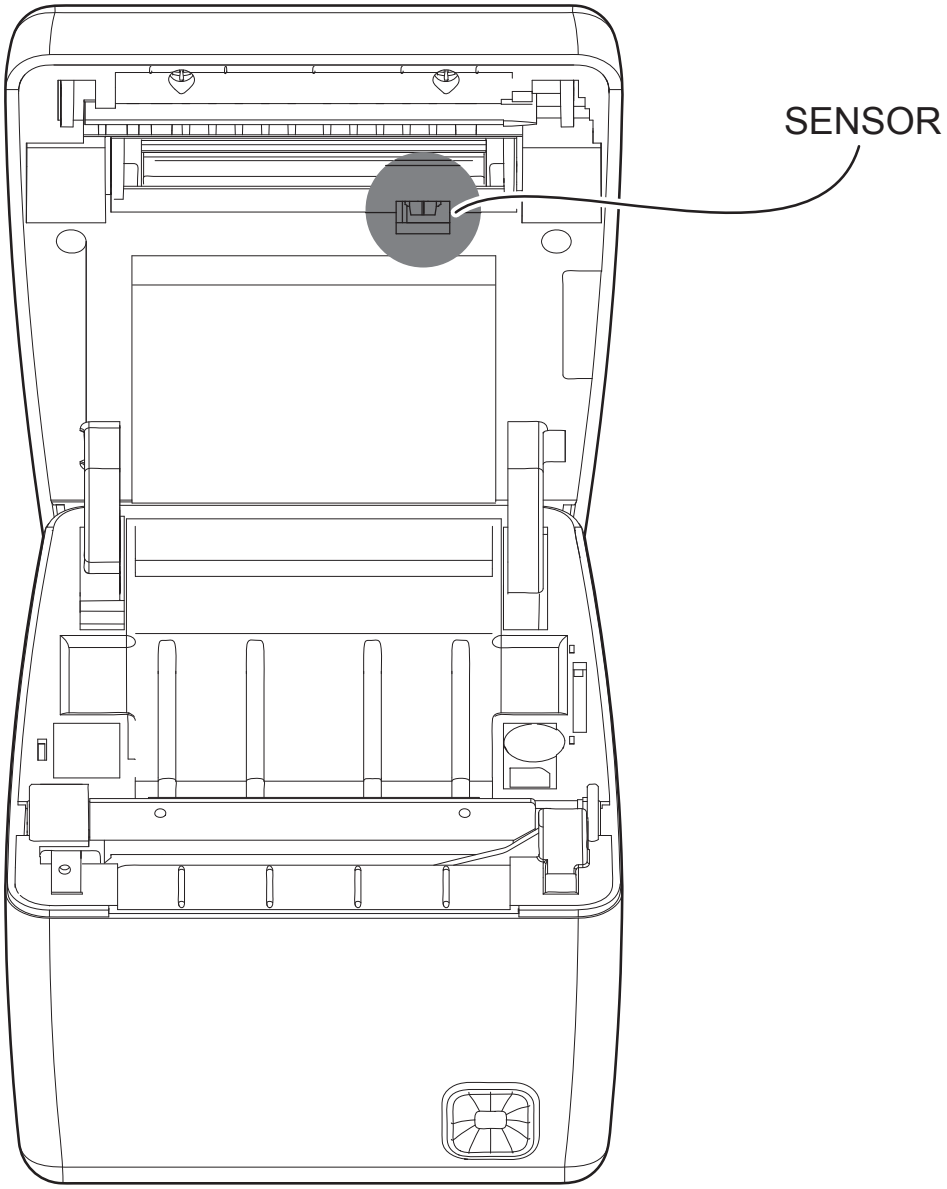

Paper with black mark on the thermal side

The following figure show the usable format of paper and the corresponding sensor used for alignment.

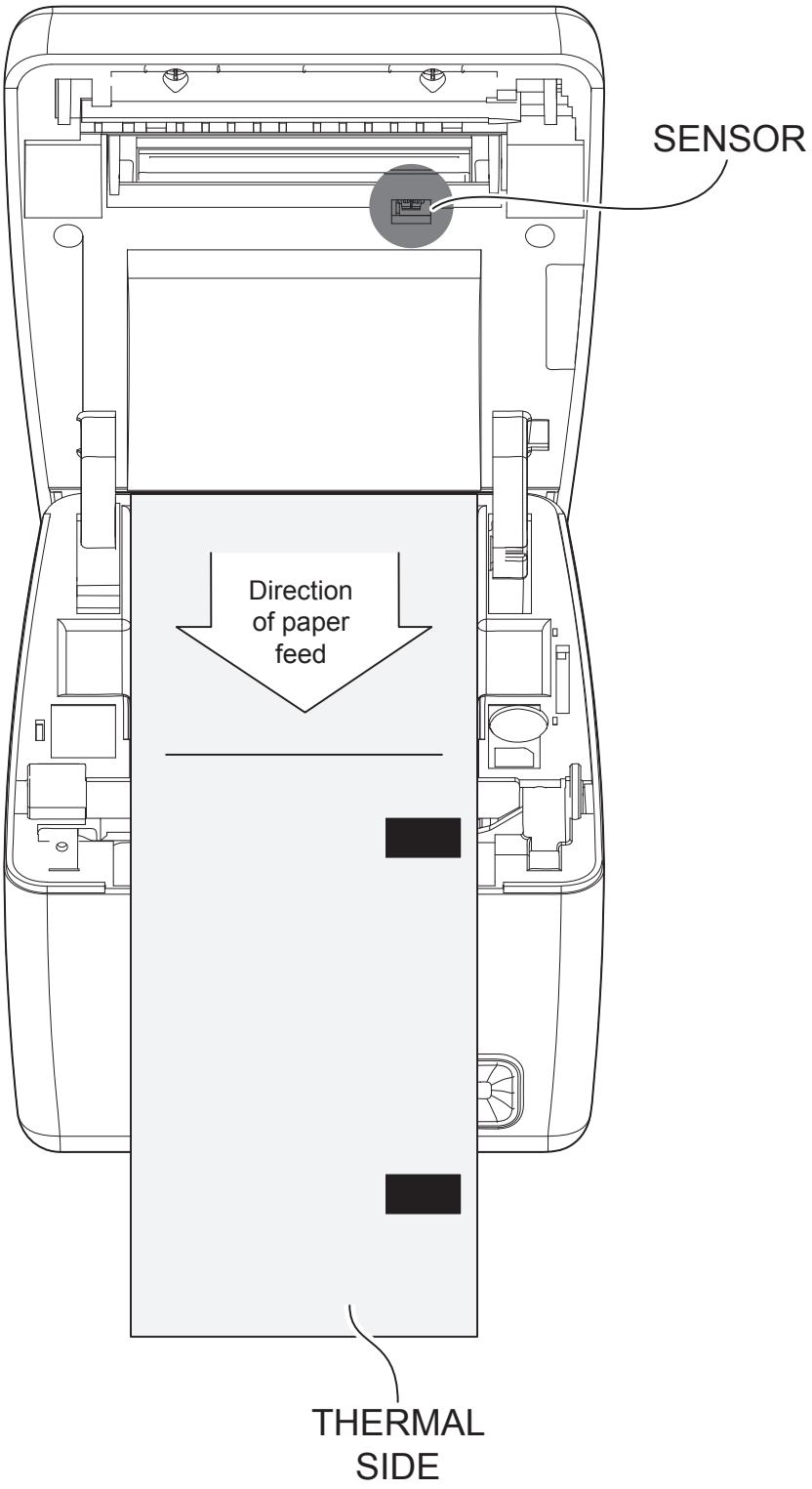

8.2 Calibration

The sensor calibration occurs automatically and consists in adjusting the quantity of light emitted to match the degree of whiteness of the paper used and the degree of black of the mark printed on paper.

The device automatically performs the self-calibration during the setup procedure only if the “Black Mark Alignment” parameter is set to “Enabled” (see chapter 6).

When self-calibration starts, the device performs some paper feeds and then it prints the calibration result and the value of the PWM duty-cicle of the alignment sensor driver so that it can be perform an optimal black mark detection:

AUTOSETTING BLACK MARK : OK
POLARIZATION VOLT : 2.4V [75%]

The “Autosetting Black Mark” parameter indicates the result of the self-calibration procedure; “OK” will appear if it has been successful, “NOT OK” will appear if the procedure has failed.

After the printing of the procedure result, the device offers the execution of the function of paper characterization “Characterize paper” and the change of the “Black Mark Threshold” parameter which represents the detection threshold of the black mark. Choosing the “YES” value for the “Characterize paper” parameter, the device prints a graphic representation (see following figures) of the outgoing voltage of the alignment sensor (expressed as a percentage) and the “Black Mark Threshold” value.
This graphic representation is useful to set the most suitable value to assign to the “Black Mark Threshold” parameter and then to better identify the optimal threshold value which takes into account the variations of the signal and the small oscillations around zero.
The following figure shows an example of paper with the non-thermal paper printed with black marks: the outgoing voltage is constant while passing the white paper between two black marks and presents a peak at each black mark.
In this case, the optimal value for “Black Mark Threshold” parameter is placed about half of the peak

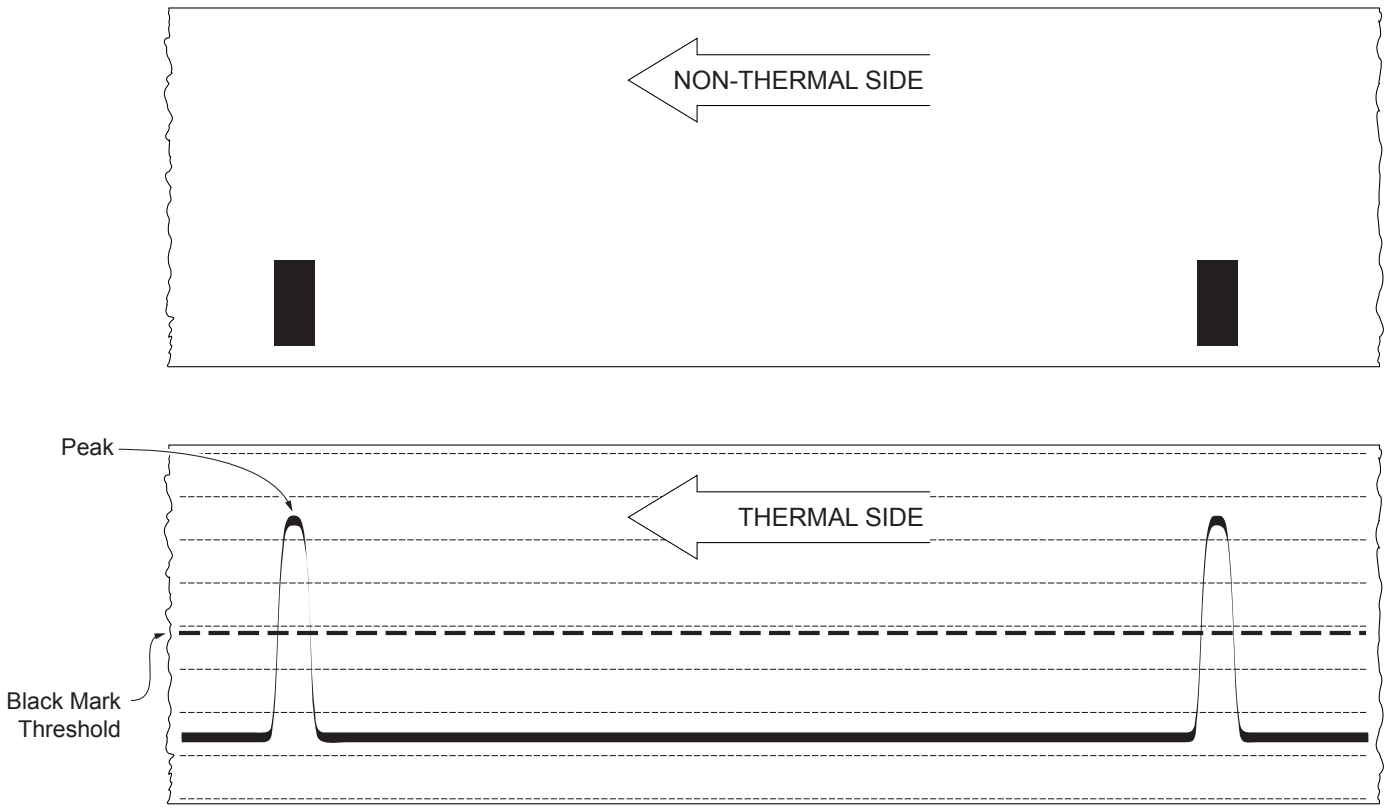

The following figure shows an example of paper with the non-thermal paper printed with black marks and other graphics (for example, a barcode): the outgoing voltage is constant while passing the white paper between two black marks, presents a peak at each black mark and presents some “noise” at each barcode. In this case, the optimal value for the “Black Mark Threshold” parameter is located about halfway between the peak value and the maximum value of the “noise”.

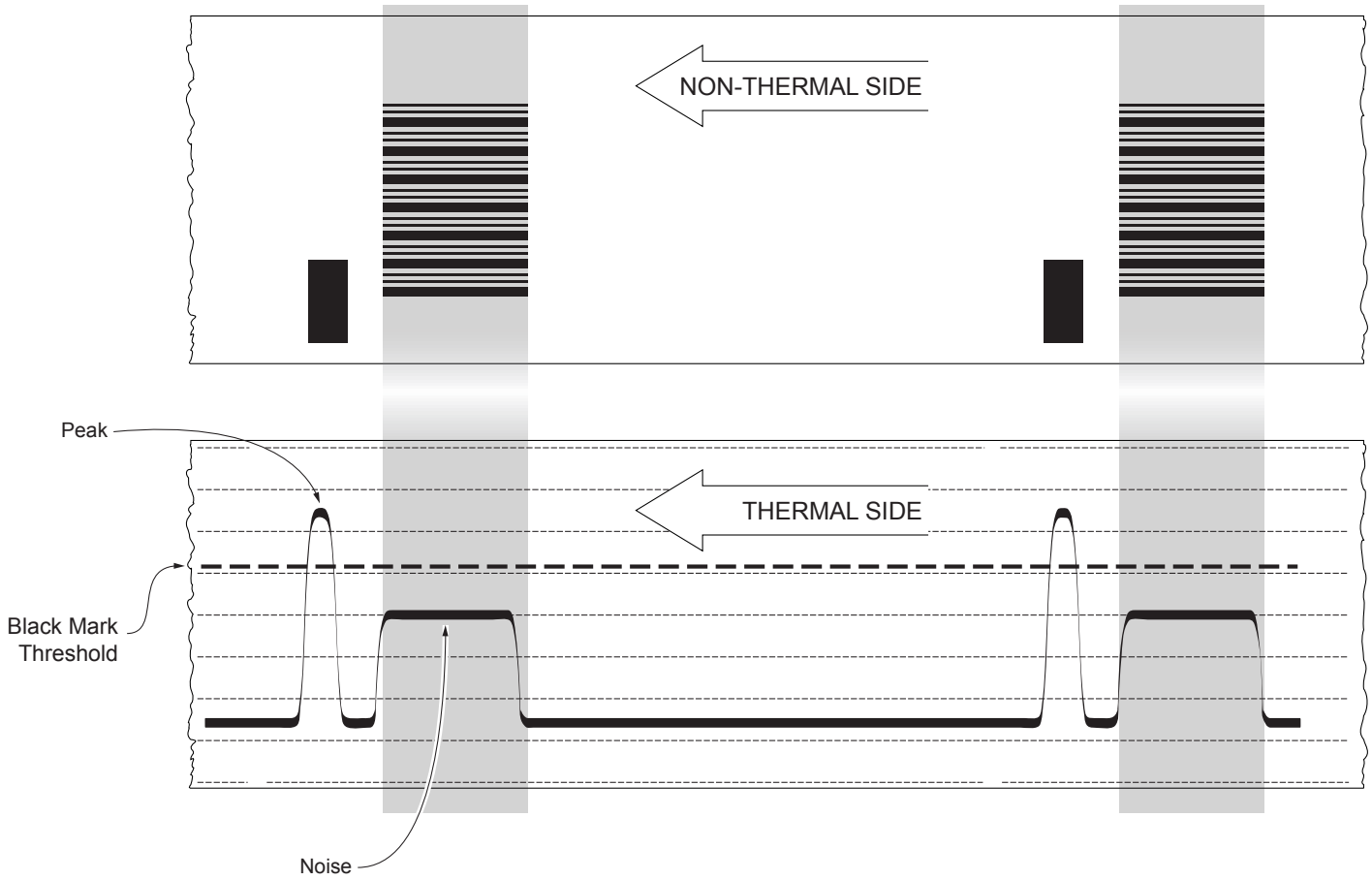

If the maximum value of “noise” read by the sensor is very close to the peak value, it might be difficult to place the value of the “Black Mark Threshold” at an intermediate point. In these cases, it is mandatory that the portion of paper between the point of printing end and the front of black mark is completely white (no graphics). In this way, the only next graphic detected by the sensor for alignment after the printing end will be the black mark.

8.3 Alignment parameters

The “alignment point” is defined as the position inside the ticket to use for the black mark alignment.
The distance between the black mark edge and the alignment point is defined as “Black Mark Distance”.

Referring to the front of the black mark, the value of “Black Mark Distance” value varies from 0 mm minimum and 22 mm maximum.

If the “Black Mark Distance” value is set to 0, the alignment point is set at the beginning of the black mark.

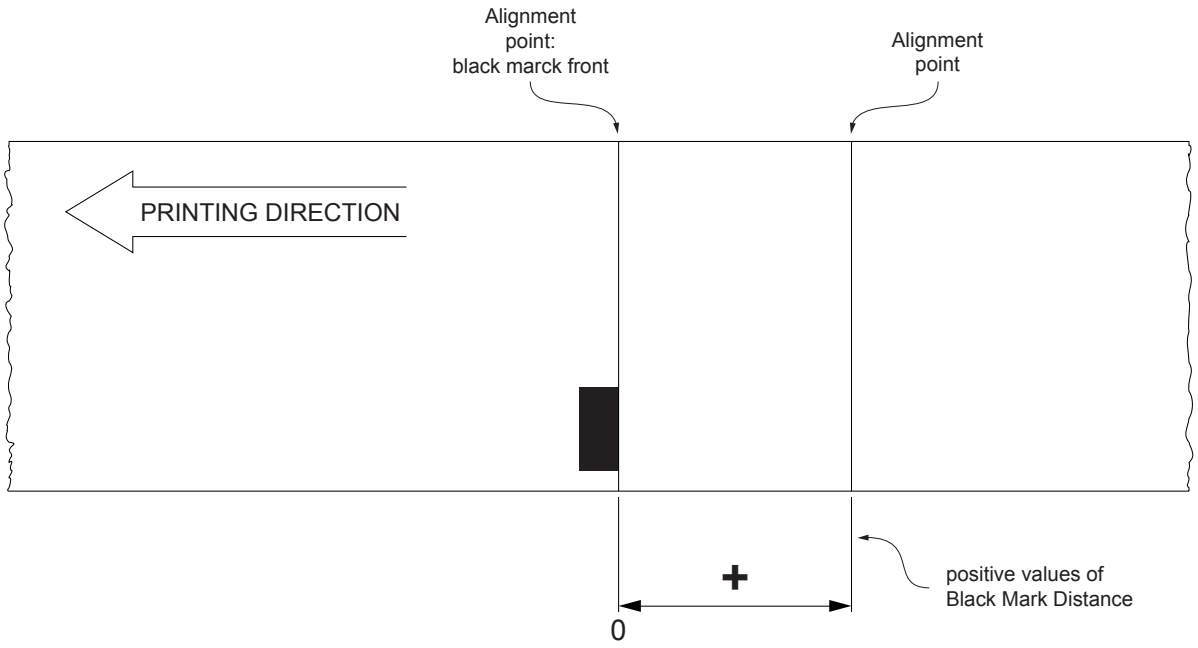

The following figure shows a simplified section of the device with the paper path and the distances (in mm) between the alignment sensor, the print head, cutter (cutting line) and paper out mouth.

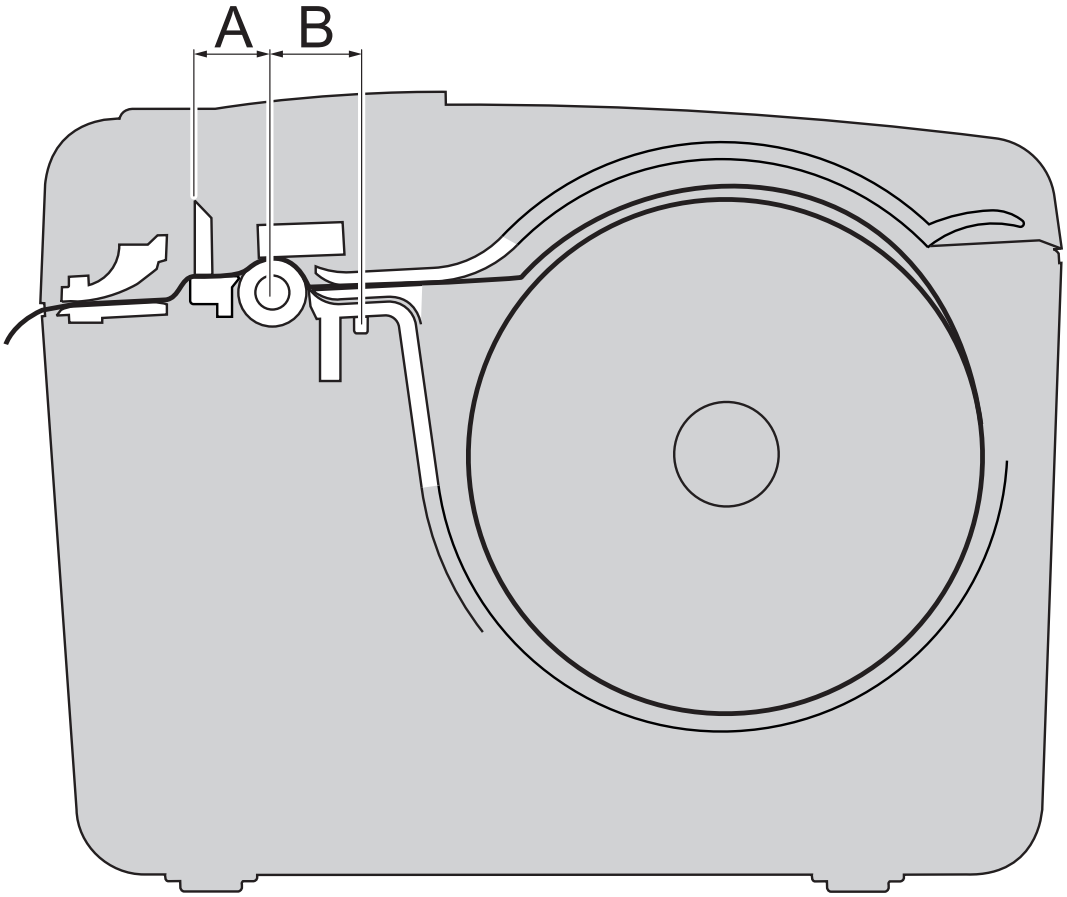

A = distance between printing head and cutter = 13.5 mm
B = distance between printing head and alignment sensor = 15 mm

CUSTOM/POS EMULATION

To define the alignment point you need to set the device parameters that compose the numerical value of the “Black Mark Distance” parameter (see paragraph 6.5).
For example, to set a black mark distance of 15 mm between the black mark and the alignment point, the parameters must be set on the following values:

Black Mark Distance [mm x 10] : 1
Black Mark Distance [mm x 1] : 5
Black Mark Distance [mm x .1] : 0

The “Black Mark Distance” parameter can be modified as described in chapter 6.

8.4 Printing area

In order to print ticket containing only one black mark and to not overlay printing to a black mark (that will make it useless for the next alignment), it is important to well calibrate the height of the printing area of the ticket according to functional the inter-black mark distance.

The following figure shows an example of tickets with “Black Mark Distance” set to 0:

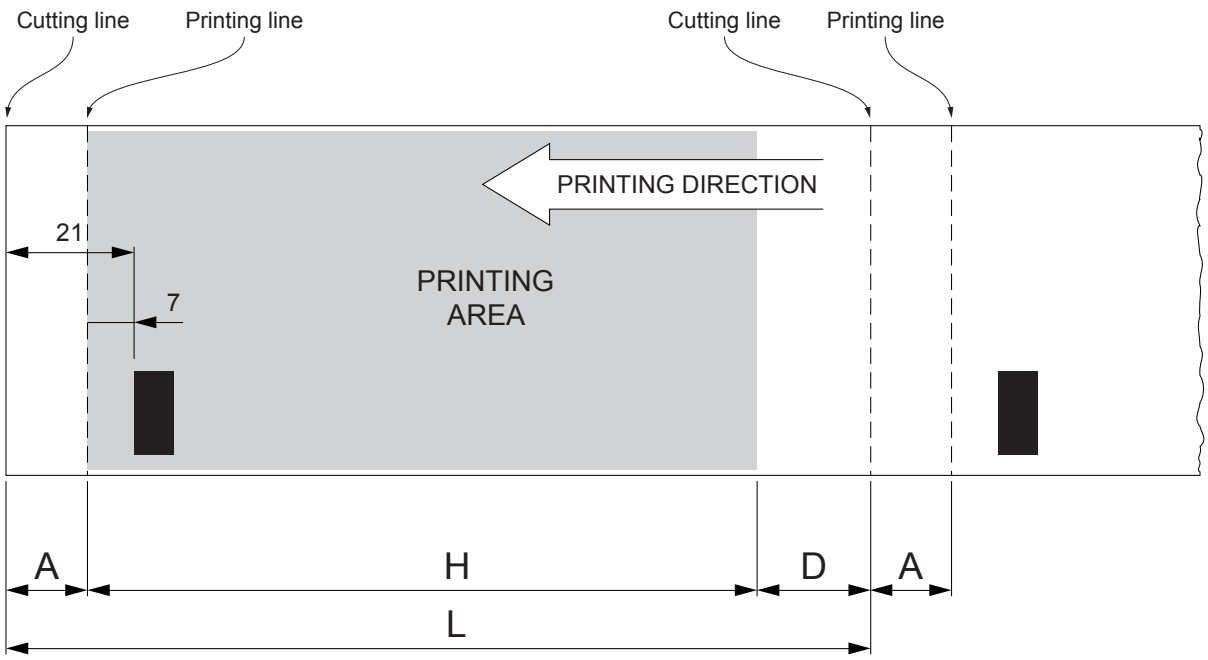

A “Non-printable area” of 14 mm generated from:

“Distance between black mark front/cutting line” - “Distance between black mark front/printing line”

where:
“Distance between black mark front/cutting line” = 21 mm
“Distance between black mark front/printing line” = 7 mm

H Distance between the first and the last print line, called “Height of the printing area”.

L Ticket length.

D Automatic feed for alignment at the next black mark.

To use all the black marks on the card, you must comply with the following equation:

$H + A \leq L$

The height of the printing area (H) can be increased to make no progress on alignment (D) but no further.

9 MAINTENANCE

9.1 Paper jam

1

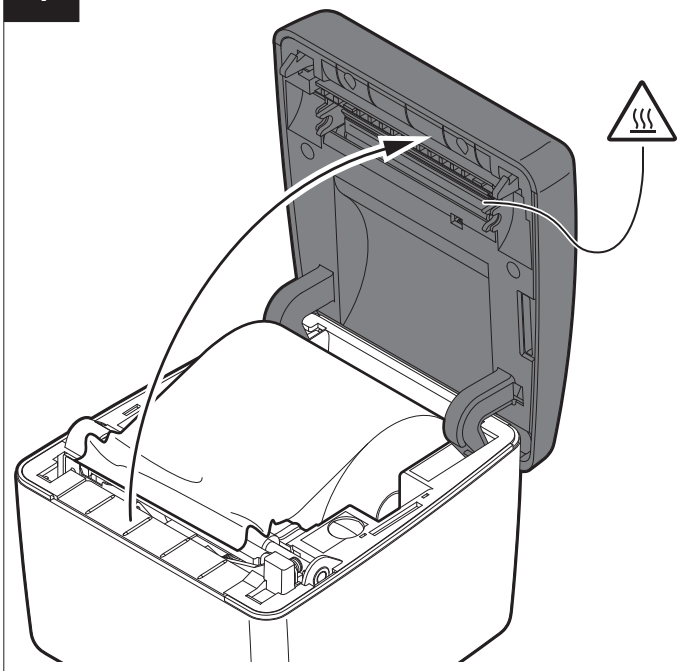

Open the device cover
(see paragraph 5.2).

2

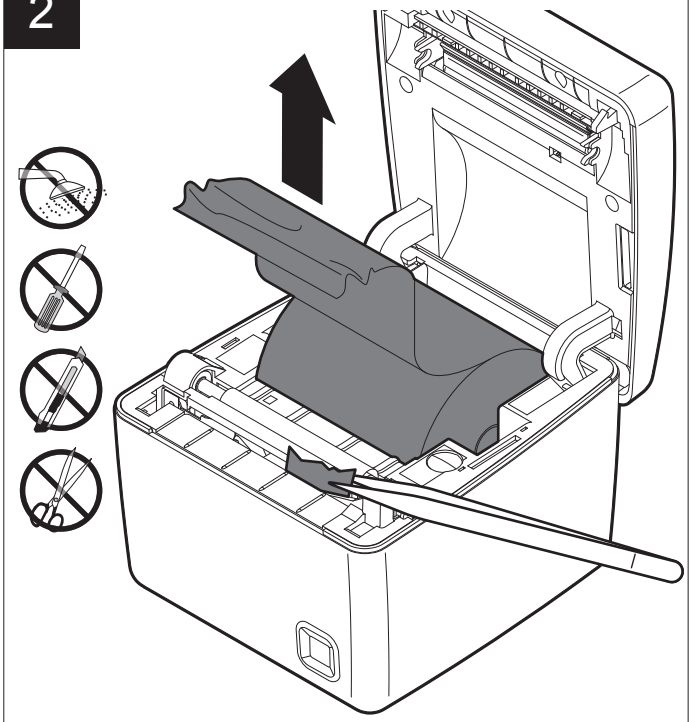

Lift the damage paper,
check and remove possible scraps of paper
along the cutter path.

3

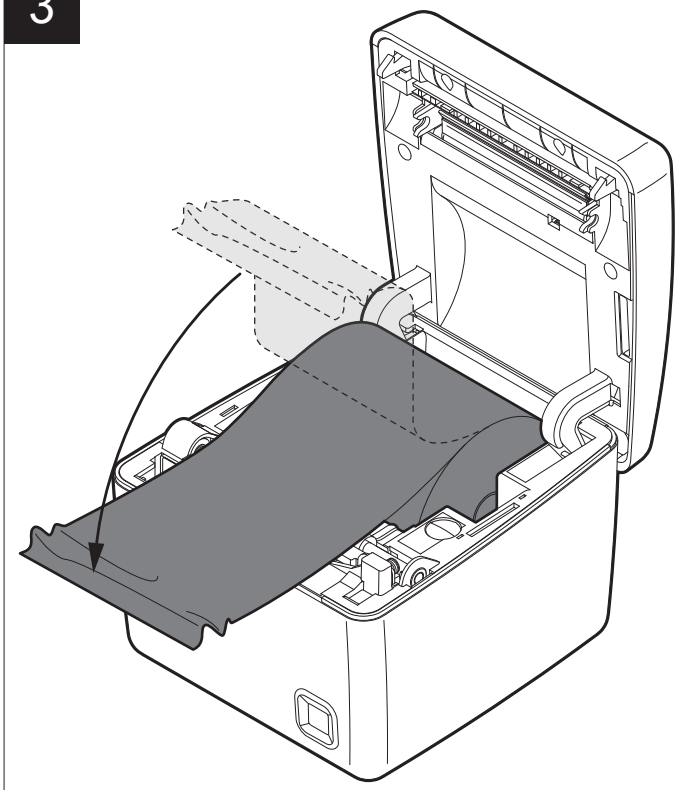

Pull the paper in order to have the damaged part
outside the device.

4

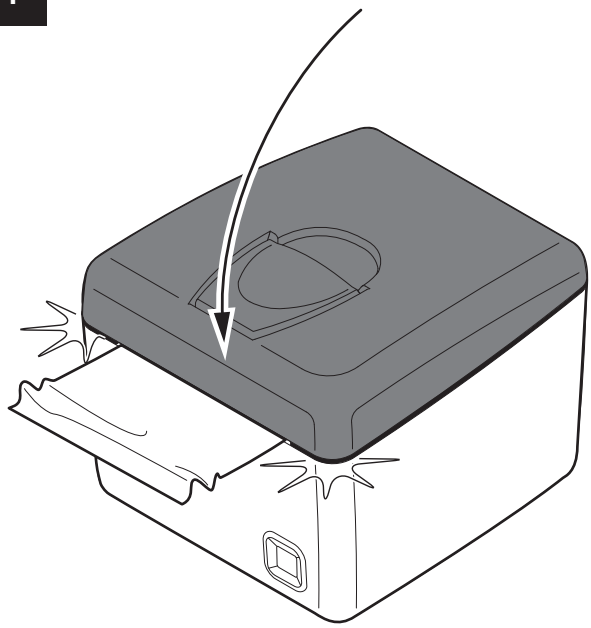

Close the cover.

9.2 Planning of cleaning operations

The regular cleaning of the device keeps the print quality and extends its life. The following table shows the recommended planning for the cleaning operations.

EVERY PAPER CHANGE	
Printhead	Use isopropyl alcohol
Platen roller	Use isopropyl alcohol
EVERY 5 PAPER CHANGES	
Cutter	Use compressed air
Paper path	Use compressed air or tweezers
Sensors	Use compressed air
EVERY 6 MONTHS OR AS NEEDED	
Printer case	Use compressed air or a soft cloth

For specific procedures, see the following pages.

NOTE: If you use the device in dusty environments, you must reduce the intervals between the cleaning operations.

9.3 Cleaning

For periodic cleaning of the device, see the instructions below.

Sensors

1

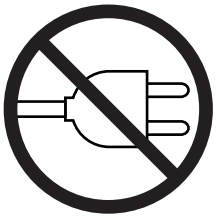

Disconnect the power supply cable and open the device cover (see paragraph 5.2).

2

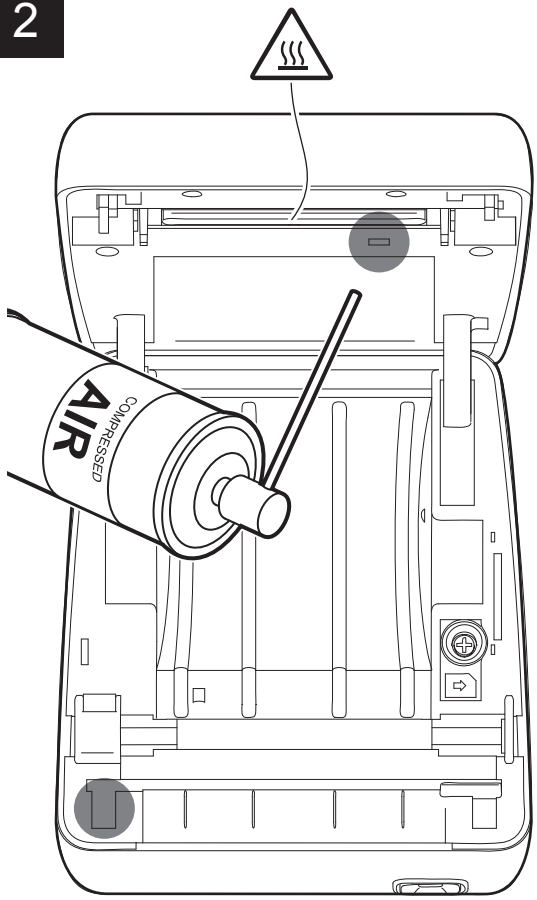

ATTENTION:
Do not use alcohol, solvents, or hard brushes.
Do not let water or other liquids get inside the device.

Clean the device sensors by using compressed air.

Paper path

1

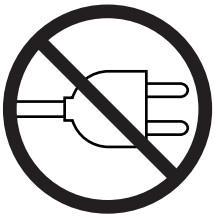

Disconnect the power supply cable and open the device cover (see paragraph 5.2).

2

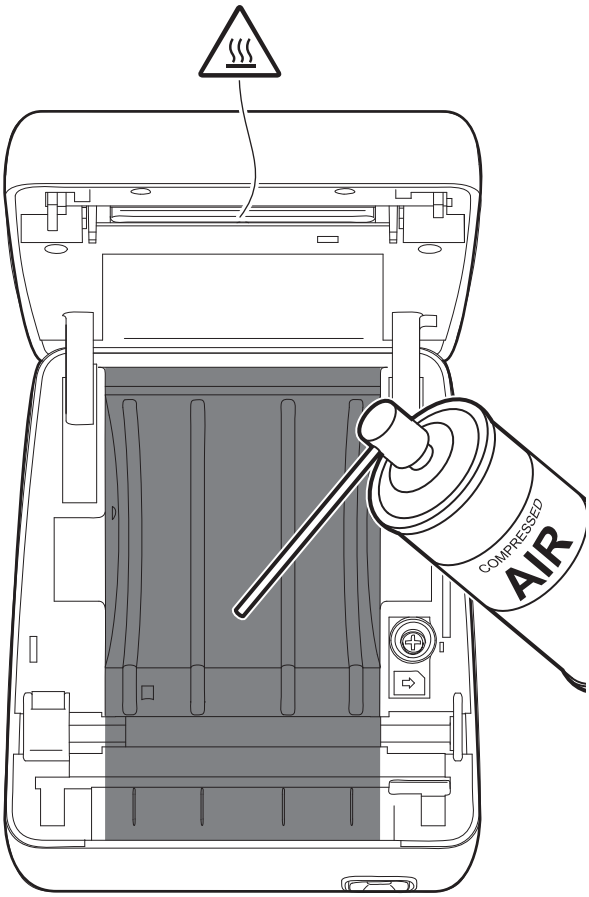

ATTENTION:
Do not use alcohol, solvents, or hard brushes.
Do not let water or other liquids get inside the device.

Clean the area involved in the passage of paper by using compressed air.

Printhead

1

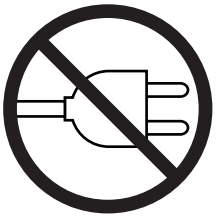

Disconnect the power supply cable and open the device cover (see paragraph 5.2).

2

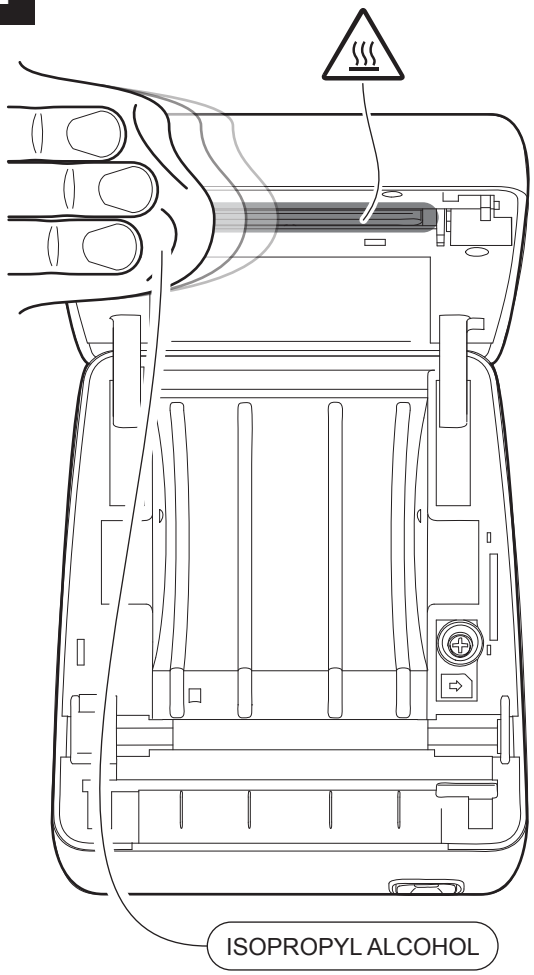

ATTENTION:
Do not use solvents, or hard brushes.
Do not let water or other liquids get inside the device.

Clean the printinghead by using a non-abrasive cloth moistened with isopropyl.

Platen roller

1

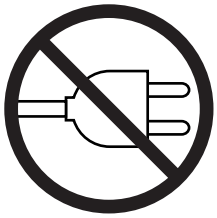

Disconnect the power supply cable and open the device cover (see paragraph 5.2).

2

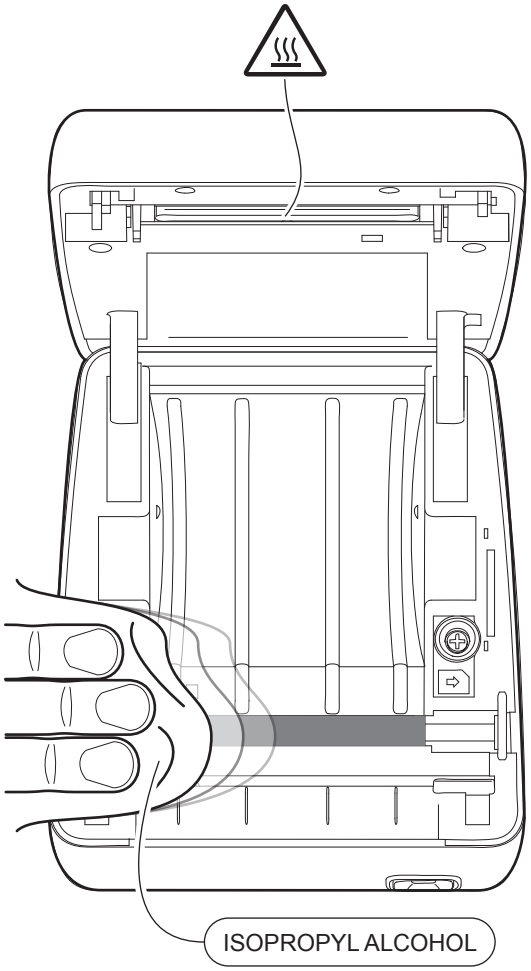

ATTENTION:
Do not use solvents, or hard brushes.
Do not let water or other liquids get inside the device.

Clean the platen roller by using a non-abrasive cloth moistened with isopropyl.

Case

1

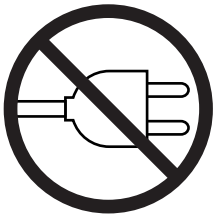

Disconnect the power supply cable.

2

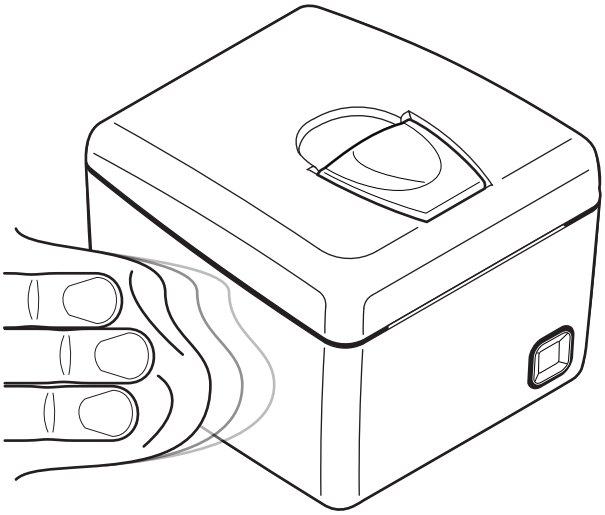

ATTENTION:
Do not use alcohol, solvents, or hard brushes.
Do not let water or other liquids get inside the device.

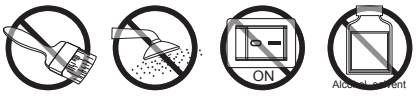

To clean the device,
use compressed air or a soft cloth.

Cutter

1

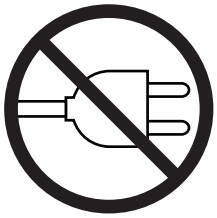

Disconnect the power supply cable and
open the device cover (see paragraph 5.2).

2

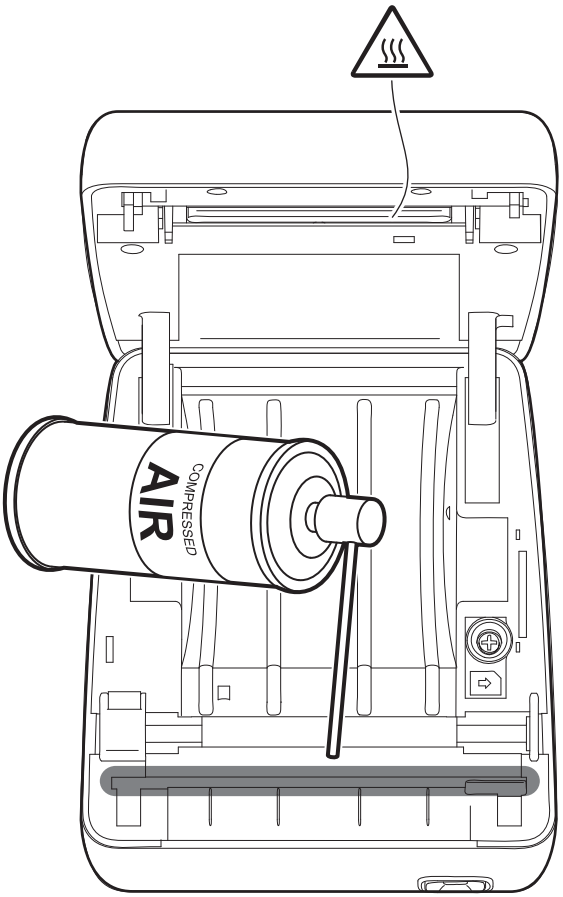

ATTENTION:
Do not use alcohol, solvents, or hard brushes.
Do not let water or other liquids get inside the device.

Clean the cutter compartment from the inside
using compressed air.

9.4 Firmware upgrade

Firmware upgrade can be performed by using the “PrinterSet” software tool available on www.custom4u.it.
To upgrade firmware, proceed as follows:

1

Login to the website www.custom4u.it, type in the product code of the device and download the latest firmware release available.

2

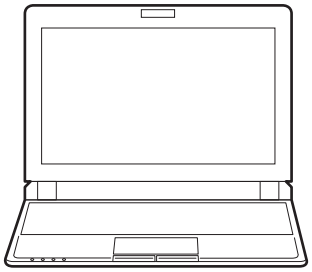

Connect the device to a PC directly (see paragraph 4.1), without using HUB devices.

3

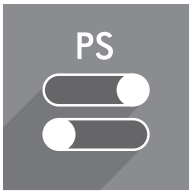

Start the “PrinterSet” software tool.

4

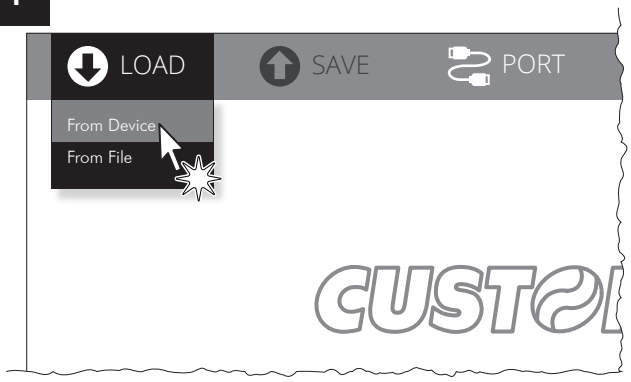

Click on LOAD > FROM DEVICE and select the device connected to the PC.

5

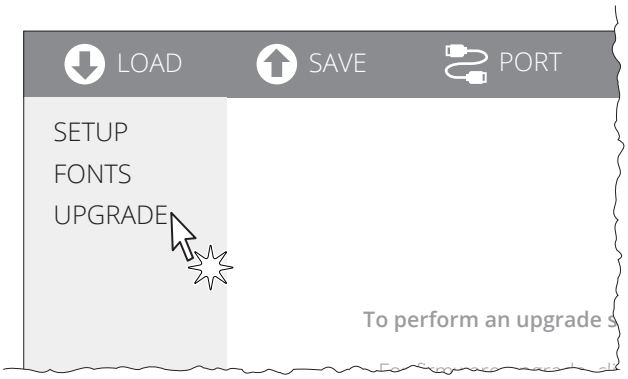

Click on UPGRADE and follow the instructions shown on the screen.

ATTENTION:
During saving, it is strongly discouraged to disconnect the communication cable or to remove the power supply of the PC or the device.

10 SPECIFICATION

10.1 Hardware specifications

GENERALS	
Sensors	Head temperature, paper presence, detection of black mark, cover open
Emulations	CUSTOM/POS
Printing driver	Windows XP VISTA (32/64 bit) Windows 7 (32/64 bit) Windows 8 (32/64 bit) Windows 8.1 (32/64 bit) Windows 10 (32/64 bit) Virtual COM (32/64 bit) with or without silent installation OPOS Linux (32/64 bit) Android Windows Phone iOS macOSX
INTERFACES	
USB port (only for Q3x, Q3x BTH and Q3x Wi-Fi)	12 Mbit/s (USB 2.0 full speed)
RS232 serial port (only for Q3x, Q3x BTH and Q3x Wi-Fi)	from 1200 bps to 115200 bps
RJ12 drawer port	24 V
Ethernet port (only for Q3x ETH)	10 Mbit/s
MEMORIES	
Receive buffer	20 kB
Flash memory	4 MB (+1 MB internal to the micro)
RAM memory	2 MB
Graphic memory	1 logo (576 x 910 dots)
PRINTER	
Resolution	203 dpi (8 dot/mm)

Printing method	Thermal, fixed head
Head life [1]	
Abrasion resistance [2]	50 km (with recommended paper)
Pulse durability	100 M
Printing width	72 mm
Printing mode	Normal, 90°, 180°, 270°
Printing format	Height/Width from 1 to 8, bold, reverse, underlined, italic
Character fonts	54 character code tables (see paragraph 10.7) Extended chinese GB18030-2000
Printable barcode	UPCA, UPCE, EAN13, EAN8, CODE39, ITF, CODABAR, CODE93, CODE128, CODE32, PDF417, QR code
Printing speed [1] [3]	Normal = 140 mm/s High Quality = 100 mm/s
PAPER	
Type of paper	Thermal rolls, heat-sensitive side on outside of roll
Paper width	80 mm ± 0.5 mm
Paper weight	from 55 g/m^2 to 60 g/m^2
Paper thickness	63 µm
Recommended types of paper	KANZAN KF50 MITSUBISHI PF5067
External roll diameter	max. 80 mm
Internal roll core diameter	12 mm (+ 1 mm) 25 mm (+ 1 mm)
Core thickness	2 mm (+1 mm)
Paper end	Not attached to roll core
Core type	Cardboard or plastic

AUTOCUTTER	
Paper cut	Partial cut
Estimated life [1]	1000000 cuts
Wi-Fi MODULE SPECIFICATIONS (only for Q3x Wi-Fi)	
Standards	IEEE 802.11b/g
Wireless speed	11 Mbps
Protocol supported	TCP/IP, IPv4
Security	40 bit and 128 bit WPA and WPA2 encryption
Antenna	2.4 GHz chip antenna
Power supply	DC 3.3 V
BLUETOOTH MODULE SPECIFICATIONS (only for Q3x BTH)	
Communication speed	2.0 Class 2 - SPP (Serial port profile)
PRINTER ELECTRICAL SPECIFICATIONS	
Power supply	24 Vdc ±10% (optional external power supply)
Medium consumption [3]	1 A
Typical consumption [4]	1 A
Stand-by consumption	0.05 A
ELECTRICAL SPECIFICATIONS POWER SUPPLY code 963GE020000041 [5]	
Power supply voltage	from 100 Vac to 240 Vac
Frequency	from 47 Hz to 63 Hz
Output	24 V, 2.5 A
Power	60 W
ELECTRICAL SPECIFICATIONS POWER SUPPLY code 963GE020000053 (optional)	
Power supply voltage	from 100 Vac to 240 Vac

Frequency	from 50 Hz to 60 Hz
Output	24 V, 2.5 A
Power	60 W
ENVIRONMENTAL CONDITIONS	
Operating temperature	from 0 °C to +50 °C
Relative humidity	from 10% Rh to 80% Rh (w/o condensation)
Storage temperature	from -20 °C to +70 °C
Storage relative humidity	from 10% Rh to 90% Rh (w/o condensation)

NOTES:
(1) : Respecting the regular schedule of cleaning for the device components.
(2) : Damages caused by scratches, ESD and electromigration are excluded.
(3) : Referred to the UL measurements.
(4) : Reffered to a standard CUSTOM receipt (L = 10 cm, Density = 12.5% dots on).
(4) : For receipts with wide black zones is recommended the optional power supply code 963GE020000053 that provides a peak current higher for larger time intervals.

10.2 Character specifications

Character set		3	
Character density	11 cpi	15 cpi	20 cpi
Number of columns	32	42	56
Chars / s	1815	2310	3080
Lines / s	55	55	55
Characters (L x H mm)-Normal	2.25 x 3	1.75 x 3	1.25 x 3

NOTE: Theoretical values.

10.3 Device dimensions

Length	150 mm
Height	117 mm (with cover closed)
Width	140 mm
Weight	920 g

NOTES:
Dimensions referred to devices without paper roll.
All the dimensions shown in following figures are in millimetres.

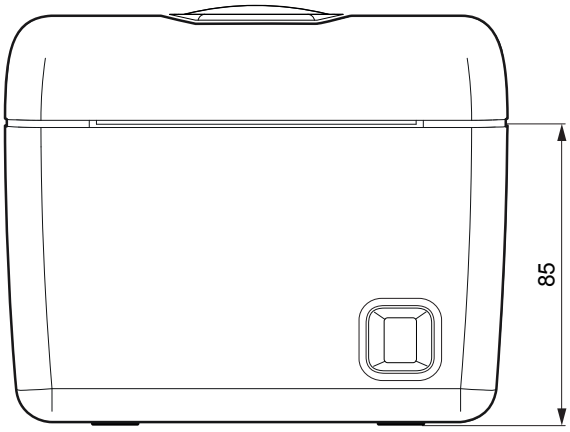

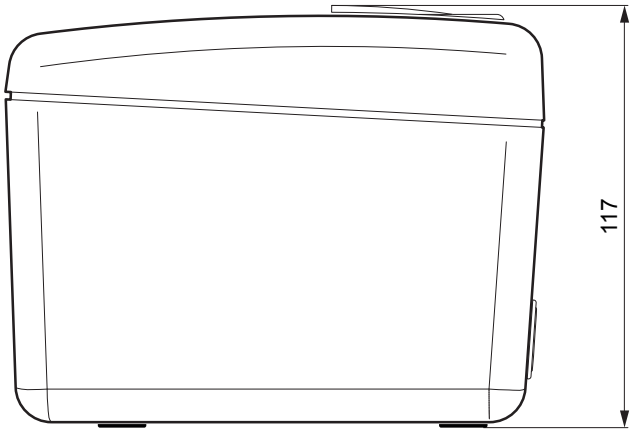

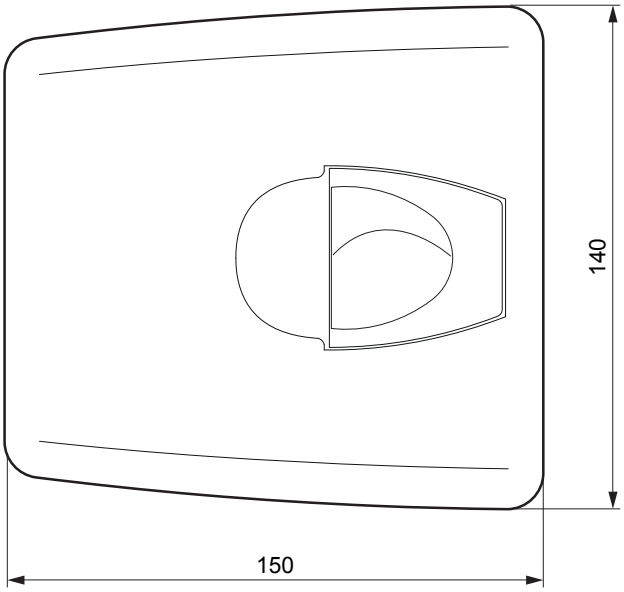

10.4 Power supply and power cord dimensions

The following table shows the dimensions of the power supply and the power cord supplied with the device.

POWER CORD code 26100000000311 and code 26100000000313	
Length	2000 mm
POWER SUPPLY code 963GE020000041	
Width	52.5 mm
Length	116 mm
Height	33 mm

NOTE:
All the dimensions shown in following figures are in millimetres.

POWER CORD code 26100000000311

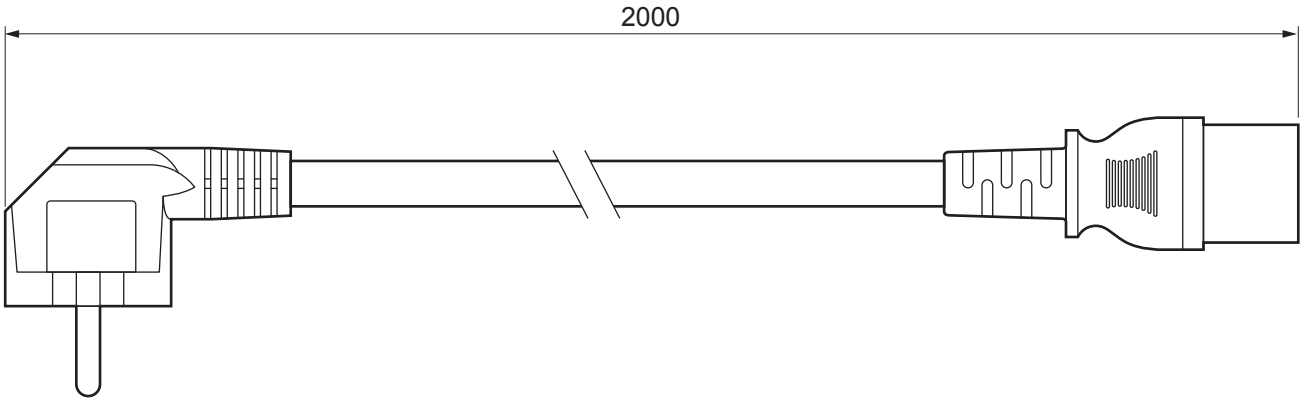

POWER CORD code 26100000000313

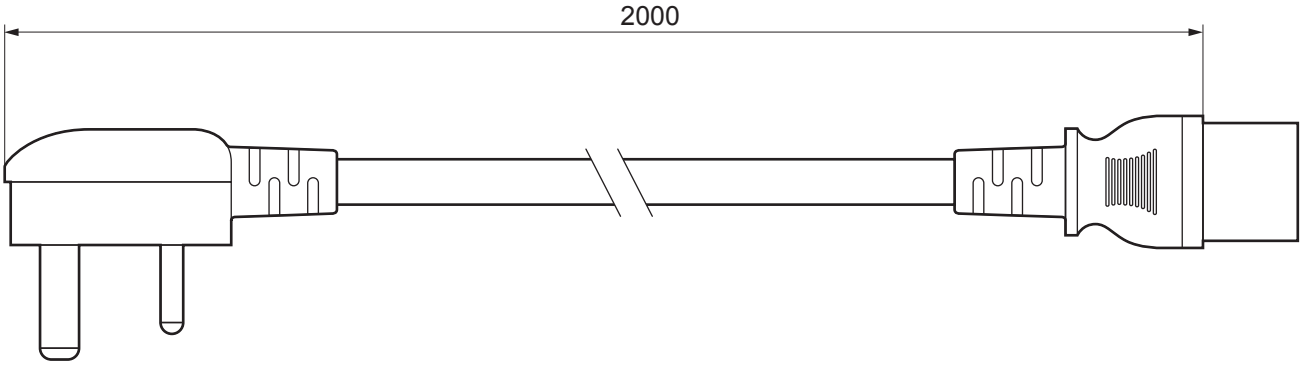

POWER SUPPLY code 963GE020000041

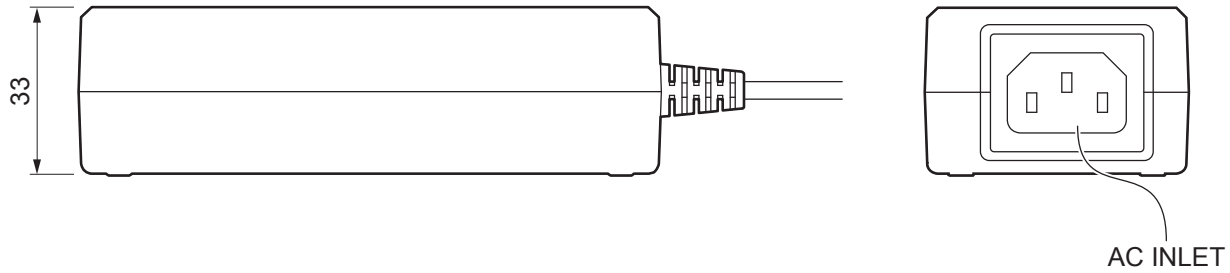

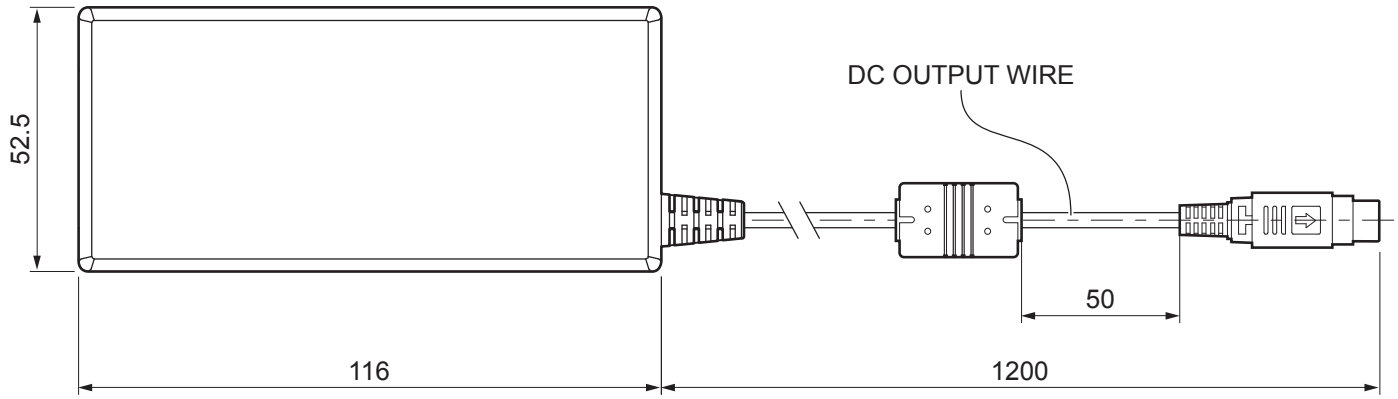

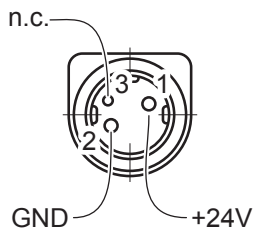

10.5 Dimensions of power supply code 963GE020000053 (optional)

Length	127 mm
Height	35.5 mm
Width	56 mm

NOTE: All the dimensions shown in following figures are in millimetres.

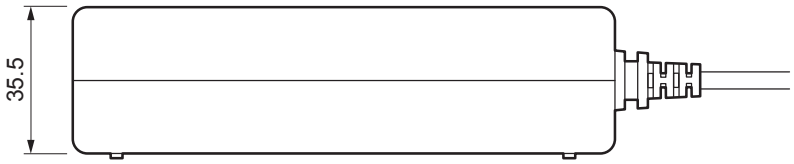

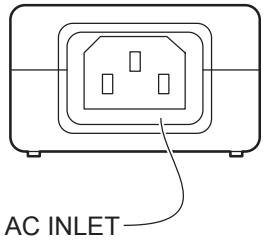

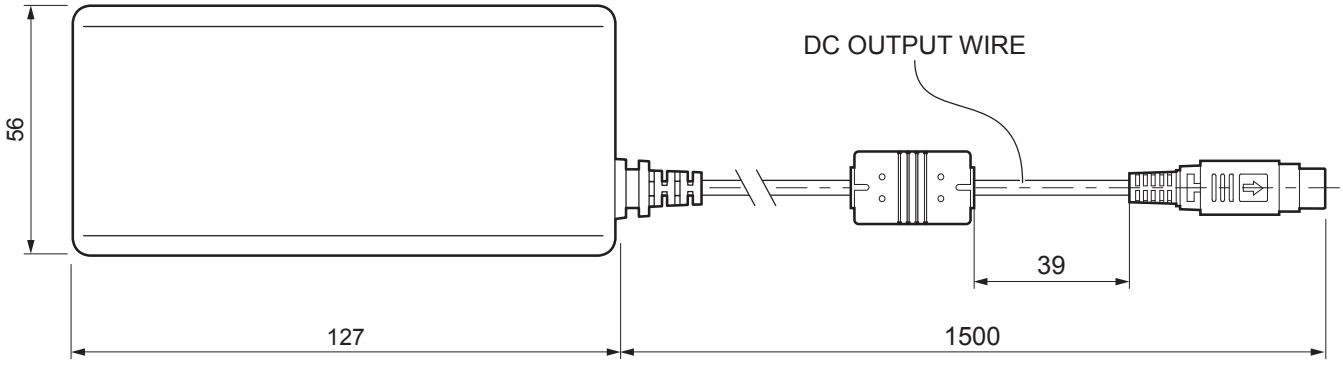

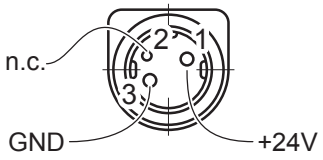

10.6 Paper specification

Paper with black mark for fixed sensor

The following image shows the placement of the black mark on the thermal side of the paper. For more information about the use of paper with black mark see chapter 8.

All the dimensions shown in following figures are in millimetres.

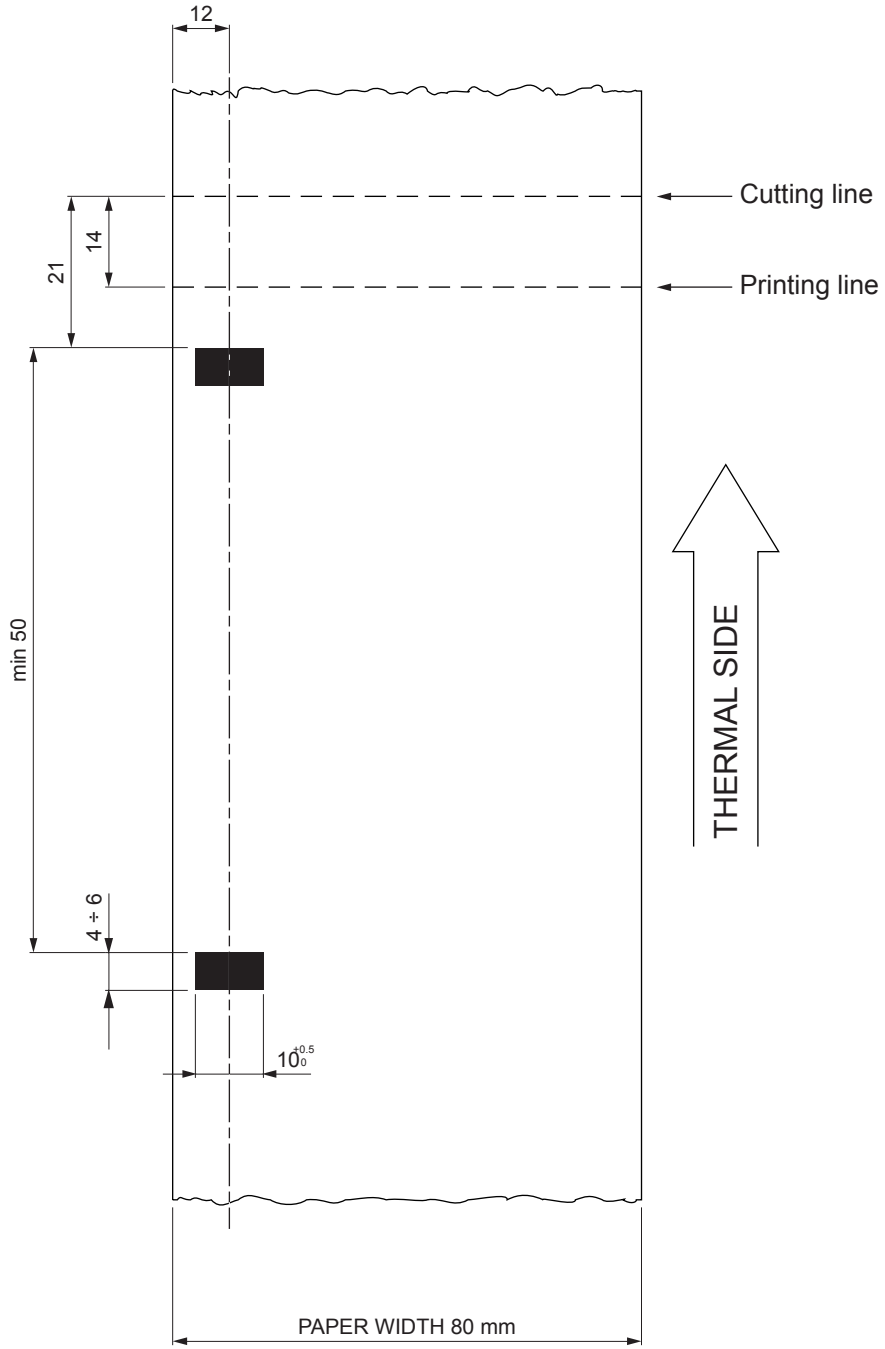

10.7 Character sets in CUSTOM/POS emulation

The printer has 3 internal fonts with a width of 11, 15, 20 cpi, which can be associated with one of the coding tables stored on the device.

The selection of the font and the encoding table is done via command (see the commands manual of the device) or through the setup procedure by properly setting the parameters “Chars / Inch” and “Code Table” (see paragraph 6.5).

The following is the complete list of coding tables that can be installed on the device.

<Code Table>	CHARACTER TABLES	
0	PC437 - U.S.A., Standard Europe	
1	Katakana	
2	PC850 - Multilingual	
3	PC860 - Portuguese	
4	PC863 - Canadian/French	
5	PC865 - Nordic	
11	PC851 - Greek	on request
12	PC853 - Turkish	on request
13	PC857 - Turkish	from firmware release 4.1 and subsequent
14	PC737 - Greek	
15	ISO8859-7 - Greek	on request
16	WPC1252	on request
17	PC866 - Cyrillic 2	
18	PC852 - Latin 2	
19	PC858 for Euro symbol at position 213	
20	KU42 - Thai	
21	TIS11 - Thai	on request
26	TIS18 - Thai	on request
30	TCVN_3 - Vietnamese	on request
31	TCVN_3 - Vietnamese	on request
32	PC720 - Arabic	on request
33	WPC775 - Baltic Rim	on request
34	PC855 - Cyrillic	

<Code Table>	CHARACTER TABLES	
35	PC861 - Icelandic	on request
36	PC862 - Hebrew	
37	PC864 - Arabic	
38	PC869 - Greek	on request
39	ISO8859-2 - Latin 2	on request
40	ISO8859-15 - Latin 9	on request
41	PC1098 - Farci	on request
42	PC1118 - Lithuanian	on request
43	PC1119 - Lithuanian	on request
44	PC1125 - Ukrainian	on request
45	WPC1250 - Latin 2	
46	WPC1251 - Cyrillic	on request
47	WPC1253 - Greek	on request
48	WPC1254 - Turkish	on request
49	WPC1255 - Hebrew	on request
50	WPC1256 - Arabic	on request
51	WPC1257 - Baltic Rim	on request
52	WPC1258 - Vietnamese	on request
53	KZ1048 - Kazakh	on request
255	Space page	

11 CONSUMABLES

The following table shows the list of available consumables for device:

DESCRIPTION	CODE
THERMAL PAPER ROLL weight = 58 g/m^2 width = 80 mm Ø external = 80 mm Ø core = 12 mm	**67300000000398** 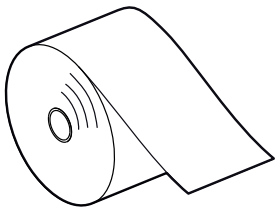

12 ACCESSORIES

The following table shows the list of available accessories for device:

DESCRIPTION	CODE
POWER SUPPLY (for technical specifications, see paragraph 10.1)	**963GE020000046** 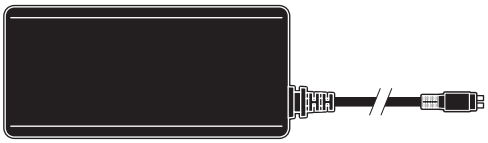
POWER SUPPLY (for technical specifications, see paragraph 10.1)	**963GE020000053** 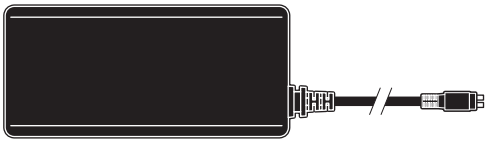
POWER CORD SCHUKO PLUG length = 2 m	**26100000000311** 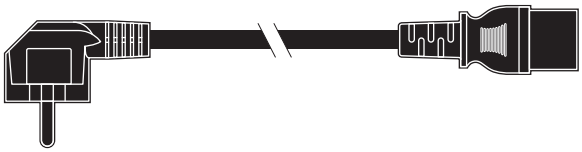
POWER CORD UK PLUG length = 2 m	**26100000000313**
SERIAL CABLE 9 pin male connector - 9 pin female connector length = 1.8 m	**26500000000352**

USB CABLE
A-B type
length = 1.8 m

26500000000356

13 TECHNICAL SERVICE

In case of failure, contact the technical service accessing the website www.custom4u.it and using the support tools on the homepage. It is advisable to keep the identification data of the product at hand.

The product code, the serial number and the hardware release number can be found on the product label (see paragraph 3.4).
The firmware release number (SCODE) can be found:

- on the setup report (see paragraph 6.1)
- connecting the device to a PC and starting the “PrinterSet” tool (see paragraph 6.2)
- by consulting the “setup.ini” file if available

Part Number : 76200000005100 Rev. 1.31

CUSTOM S.p.A.
World Headquarters
Via Berettine, 2/B - 43010 Fontevivo, Parma ITALY
Tel. +39 0521 680111 - Fax +39 0521 610701
info@custom.biz - www.custom.biz

All rights reserved